Polo Estate 1998 ➤

5-speed manual gearbox 02K from 10.99									
Gearbox ID	DUV	EAY	EAZ	FVW					

Edition 01.2000

satelettronica

Protected by copyright. Copying for private or commercial purposes, in part or in whole, is not permitted unless authorised by Volkswagen AG. Volkswagen AG does not guarantee or accept any liability with respect to the correctness of information in this document. Copyright by Volkswagen AG.

List of Workshop Manual Repair GroupsList of Workshop Manual Repair GroupsList of Workshop Manual Repair Groups

Polo Estate 1998 ➤

5-speed manual gearbox 02K from 10.99

Repair Group

00 - Technical data
30 - Clutch
34 - Controls, Housing
35 - Gears, Shafts
39 - Final drive, Differential

Protected by copyright. Copying for private or commercial purposes, in part or in whole, is not permitted unless authorised by Volkswagen AG. Volkswagen AG does not guarantee or accept any liability with respect to the correctness of information in this document. Copyright by Volkswagen AG.

satelettronica

Technical information should always be available to the foremen and mechanics, because their careful and constant adherence to the instructions is essential to ensure vehicle road-worthiness and safety. In addition, the normal basic safety precautions for working on motor vehicles must, as a matter of course, be observed.

All rights reserved.
No reproduction without prior agreement from publisher.

Copyright © 2011 Volkswagen AG, Wolfsburg

00056408020

Contents

00 - Technical data . . . 1
1 Gearbox identification . . . 1
1.1 Gearbox identification . . . 1
1.2 Code letters, assembly allocation, ratios, capacities . . . 2
2 Transmission layout . . . 4
2.1 Transmission layout . . . 4
3 Calculating overall ratio "i" . . . 6
3.1 Calculating overall ratio "i" . . . 6
4 General repair instructions . . . 6
4.1 General repair instructions . . . 6

30 - Clutch . . . 9
1 Servicing clutch control . . . 9
1.1 Servicing clutch control . . . 9
1.2 Assembly overview - Pedal cluster . . . 10
1.3 Removing and installing over-centre spring . . . 13
1.4 Removing and installing clutch pedal . . . 14
1.5 Removing and installing mounting bracket . . . 16
1.6 Assembly overview - Hydraulic system . . . 20
1.7 Removing and installing master cylinder . . . 23
1.8 Bleeding clutch system . . . 25
2 Servicing clutch . . . 26
2.1 Servicing clutch . . . 26
2.2 Removing and installing clutch . . . 29

34 - Controls, Housing . . . 32
1 Servicing gear selector mechanism . . . 32
1.1 Servicing gear selector mechanism . . . 32
1.2 Installation position of gear selector mechanism . . . 32
1.3 Removing and installing selector lever knob and gaiter . . . 35
1.4 Assembly overview - Gearstick housing/gearstick . . . 36
1.5 Assembly overview - gear selector relay points at gearbox . . . 41
1.6 Removing and installing gear stick lever/selector rod . . . 45
1.7 Adjusting gear selector mechanism . . . 47
2 Removing and installing gearbox . . . 50
2.1 Removing and installing gearbox . . . 50
3 Checking gear oil . . . 64
3.1 Checking gear oil . . . 64
4 Dismantling and assembling gearbox . . . 65
4.1 Dismantling and assembling gearbox . . . 65
4.2 Overview . . . 66
4.3 Assembly overview . . . 67
4.4 Removing and installing gearbox housing cover and 5th gear . . . 68
4.5 Removing and installing gearbox housing and selector mechanism . . . 70
4.6 Removing and installing input shaft, output shaft (pinion shaft), differential and selector forks . . . 74
4.7 Dismantling and assembling sequence . . . 80
5 Servicing gearbox housing and selector shaft . . . 100
5.1 Servicing gearbox housing and selector shaft . . . 100
6 Servicing clutch housing . . . 107
6.1 Servicing clutch housing . . . 107
7 Servicing gearbox housing cover . . . 115

Copyright by Volkswagen AG, Volkswagen AG does not guarantee or accept any liability with respect to the correctness of information in this document. Copying or printing for commercial purposes is not permitted without the consent of Volkswagen AG.
satelettronica

7.1 Servicing gearbox housing cover 115

35 - Gears, Shafts 120

1 Dismantling and assembling input shaft 120
1.1 Dismantling and assembling input shaft 120
2 Dismantling and assembling output shaft 132
2.1 Dismantling and assembling output shaft 132
3 Adjusting output shaft 143
3.1 Adjusting output shaft 143

39 - Final drive, Differential 147

1 Renewing flanged shaft oil seals (gearbox installed) 147
1.1 Renewing flanged shaft oil seals (gearbox installed) 147
2 Dismantling and assembling differential 150
2.1 Dismantling and assembling differential 150
3 Adjustment overview 161
3.1 Adjustment overview 161
4 Adjusting differential 162
4.1 Adjusting differential 162

Protected by copyright. Copying for private or commercial purposes, in part or in whole, is not permitted unless authorised by Volkswagen AG. Volkswagen AG does not guarantee or accept any liability with respect to the correctness of information in this document. Copyright by Volkswagen AG.
satelettronica

00 - Technical data

1 - Gearbox identification

1.1 - Gearbox identification

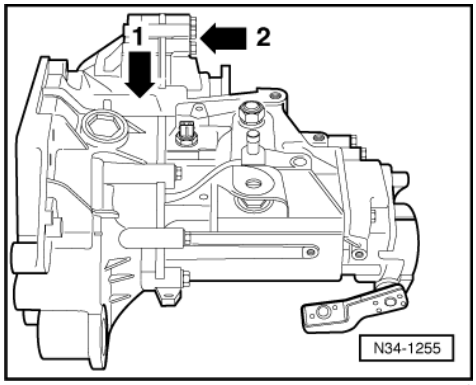

In the Caddy 1996 ▸, Polo Classic 1996 ▸and Polo Estate 1998 ▸ the 5-speed manual gearbox 02K is installed in combination with the 4 cyl. engine.

Allocation =>Page 2 .

-> Location on gearbox

Code letters and date of manufacture (arrow 1)

Manual gearbox 020 (arrow 2)

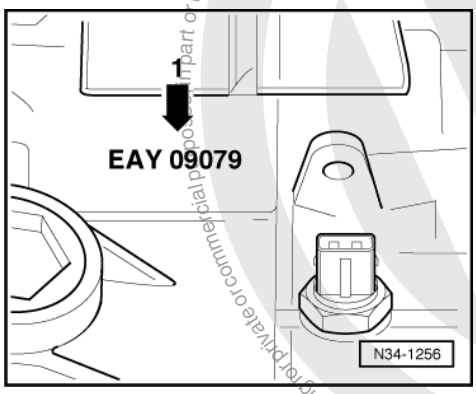

-> Code letters and date of manufacture of gearbox (arrow 1)

Example:	EAY	09	07	9
	I	I	I	I
	I	I	I	I
	Code letters	Day	Month	Year (1999) of manufacture

Additional data depends on manufacture.

Protected by copyright. Copying for private or commercial purposes, in part or in whole, is not permitted unless authorised by Volkswagen AG. Volkswagen AG does not guarantee or accept any liability with respect to the correctness of information in this document. Copyright by Volkswagen AG.
satelettronica

Note:

The gearbox code letters are also shown on the vehicle identification plates.

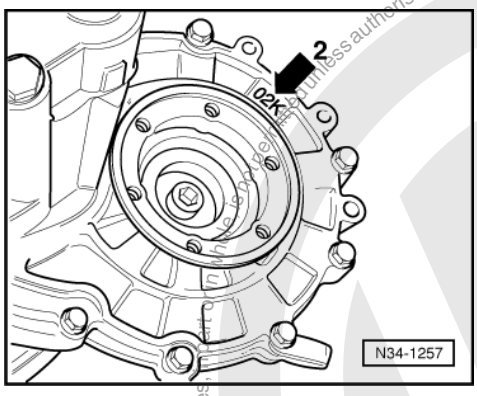

-> Manual gearbox 02K (arrow 2)

1.2 - Code letters, assembly allocation, ratios, capacities

Manual gearbox		5-speed 02K		
Code letters		DUV	EAY	EAZ
Manufactured	from to	08.98	04.98	04.98
Allocation	Model	Polo Classic 1996 ▸ Polo Estate 1998 ▸	Polo Classic 1996 ▸ Polo Estate 1998 ▸	Caddy 1996 ▸
	Engine	1.6 ltr. - 74 kW	1.9 ltr. - 50 kW diesel	1.9 ltr. - 50 kW diesel
Ratio: Z2 : Z1	Final drive	68 : 16 = 4.250	66 : 18 = 3.667	67 : 17 = 3.941
	1st gear	38 : 11 = 3.455	38 : 11 = 3.455	38 : 11 = 3.455
	2nd gear	35 : 18 = 1.944	35 : 18 = 1.944	35 : 18 = 1.944
	3rd gear	36 : 28 = 1.286	36 : 28 = 1.286	36 : 28 = 1.286
	4th gear	31 : 32 = 0.969	31 : 33 = 0.939	31 : 33 = 0.939
	5th gear	33 : 41 = 0.805	38 : 51 = 0.745	38 : 51 = 0.745
	6th gear	-	-	-
	Reverse gear	38 : 12 = 3.167	38 : 12 = 3.167	38 : 12 = 3.167
	Speedometer drive	15 : 7 = 2.143	15 : 7 = 2.143	15 : 7 = 2.143

Code letters	DUV	EAY	EAZ
Capacity	1.9 litres		
Specification	Gear oil G50 SAE 75W90 (synthetic oil)		
Clutch control	hydraulic	hydraulic	hydraulic
Clutch plate ø	210 mm	200 mm	200 mm
Drive shaft flange ø	90 mm	90 mm	90 mm
Overall ratio in top gear	3.421	2.732	2.936

Manual gearbox	5-speed 02K		
Code letters	FVW		

satelettronica

Manual gearbox		5-speed 02K		
Manufactured	from to	03.01		
Allocation	Model	Caddy 1996 ▸		
	Engine	1.9 ltr. - 47 kW Diesel		
Ratio: Z2 : Z1	Final drive	67 : 17 = 3.941		
	1st gear	38 : 11 = 3.455		
	2nd gear	35 : 18 = 1.944		
	3rd gear	36 : 28 = 1.286		
	4th gear	31 : 33 = 0.939		
	5th gear	38 : 51 = 0.745		
	6th gear	-	-	-
	Reverse gear	38 : 12 = 3.167		
	Speedometer drive	15 : 7 = 2.143		

Code letters	FVW		
Capacity	1.9 litres		
Specification	Gear oil G50 SAE 75W90 (synthetic oil)		
Clutch control	hydraulic		
Clutch plate ø	210 mm		
Drive shaft flange ø	90 mm		
Overall ratio in top gear	2.936		

Protected by copyright. Copying for private or commercial purposes, in part or in whole, is not permitted unless authorised by Volkswagen AG. Volkswagen AG does not guarantee or accept any liability with respect to the correctness of information in this document. Copyright by Volkswagen AG.
satelettronica

2 - Transmission layout

2.1 - Transmission layout

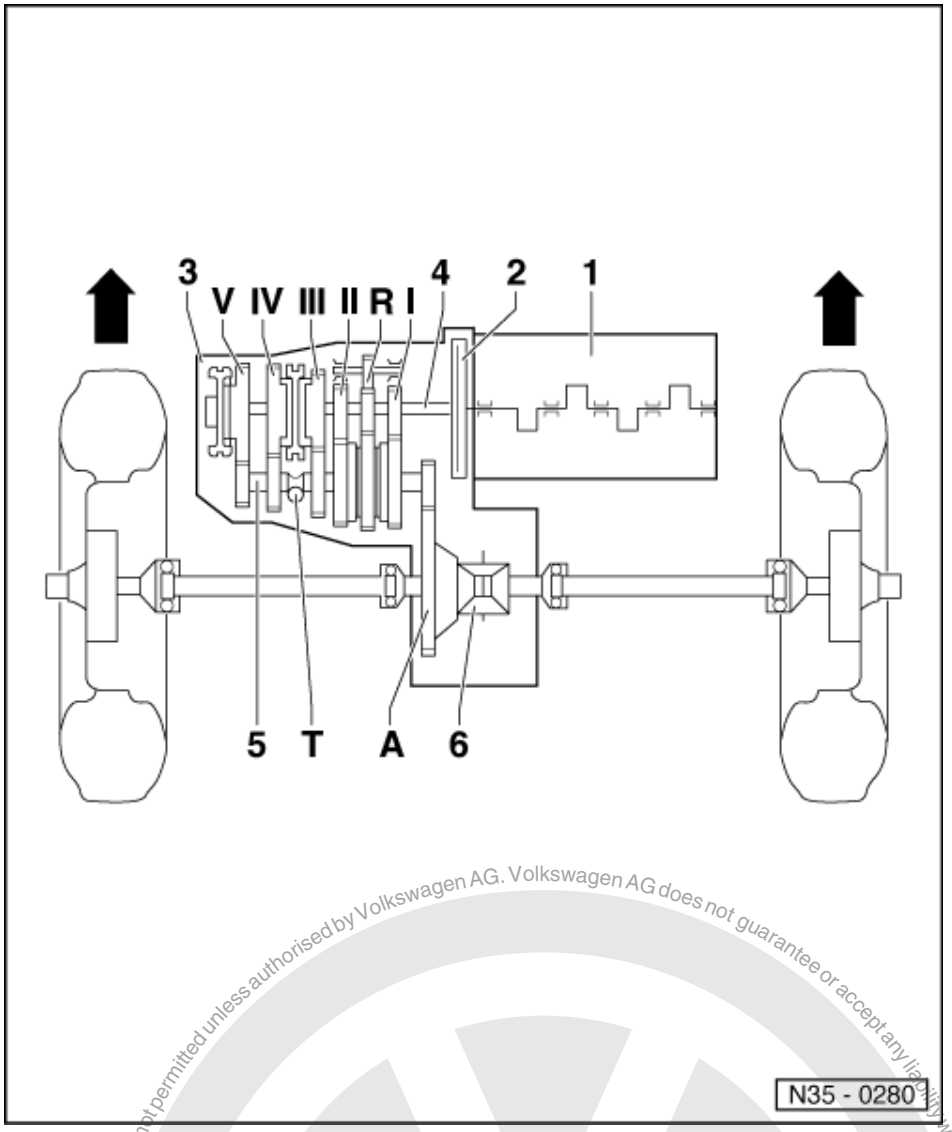

Designation

1 Engine
2 Clutch
3 Gearbox
4 Input shaft
5 Output shaft/pinion shaft
6 Differential

Arrows point in direction of travel

Protected by copyright. Copying for private or commercial purposes, in any form or medium, is not permitted unless authorised by Volkswagen AG. Volkswagen AG does not guarantee or accept any liability with respect to the correctness of information in this document. Copyright by Volkswagen AG.
satelettronica

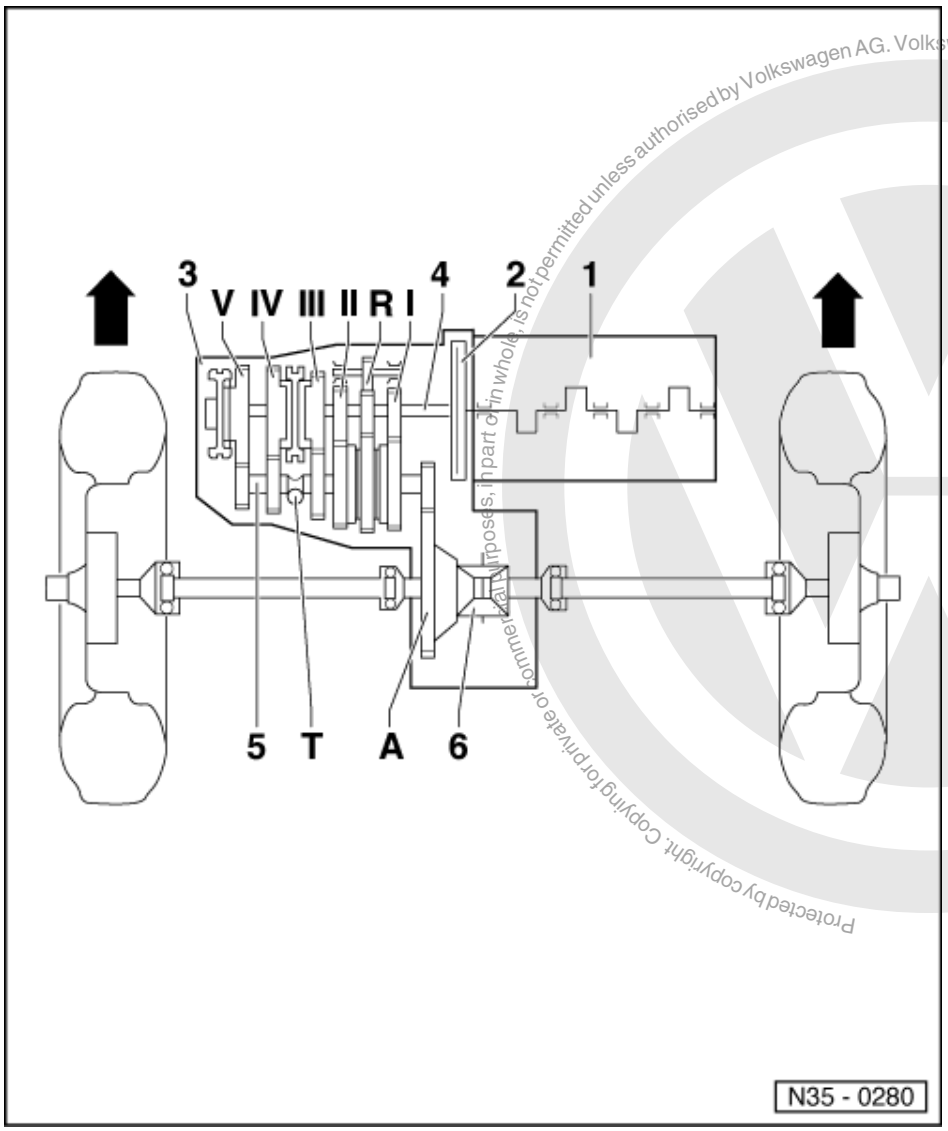

Protected by copyright. Copying for private or commercial purposes, in part or in whole, is not permitted unless authorised by Volkswagen AG. Volkswagen AG does not guarantee or accept any liability with respect to the correctness of information in this document. Copyright by Volkswagen AG.
satelettronica

Gear ratios

I	- 1st gear
II	- 2nd gear
III	- 3rd gear
IV	- 4th gear
V	- 5th gear
R	- Reverse gear
A	- Final drive
T	- Speedometer drive

Arrows point in direction of travel

3 - Calculating overall ratio "i"

3.1 - Calculating overall ratio "i"

Example:

	5th gear	Final drive
Drive gear	ZG1 = 51	ZA1 = 18
Driven gear	ZG2 = 38	ZA2 = 66

i= Z2/ Z1 1)

iG = gear ratio = ZG2: ZG1 = 38 : 51 = 0.745

iA = axle ratio = ZA2 : ZA1 = 66 : 18 = 3.667

iOV = overall ratio
= ig x ia = 0.745 x 3.667 = 2.732

1) Z1 = No. of teeth driving gear, Z2 = No. of teeth driven gear

4 - General repair instructions

4.1 - General repair instructions

To ensure perfect and successful gearbox repairs, the greatest care and cleanliness as well as the use of good and proper tools is essential. Obviously, the basis rules for safety are also applicable during repair work.

A number of generally valid instructions applicable for the various repair procedures - which were previously repeated a number of times at numerous places in the Workshop Manual - are summarized here. They apply to this Workshop Manual.

Gearbox

- When installing ensure that the dowel sleeves between the engine and gearbox are correctly located.
- When changing a gearbox fill with gear oil to the lower edge of the filler hole.
- Capacities and specifications => from Page 2 .

Gaskets, sealing rings

- Thoroughly clean joint surfaces and apply sealant AMV 188 200 03 evenly, not too thick .
- Renew "O-rings".
- Radial shaft oil seals.

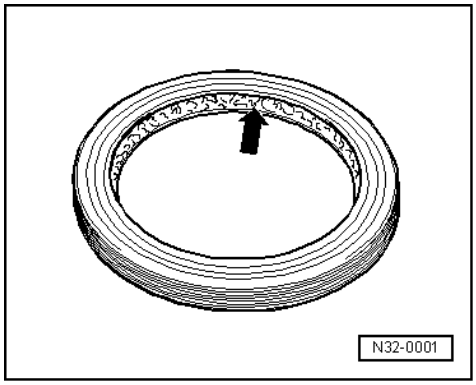

Protected by copyright. Copying for private or commercial purposes, in part or in whole is not permitted unless authorised by Volkswagen AG. Volkswagen AG does not guarantee or accept any liability with respect to the correctness of information in this document. Copyright by Volkswagen AG.
satelettronica

Before installing:

-> Lightly oil outer edge and half-fill space between sealing lips -arrow- with grease G 052 128 A1.

After installation:

Check gearbox oil; if necessary top-up to lower edge of oil filler hole, specification =>from Page 2 .

Locking devices

- Renew circlips.
- Do not overstretch circlips.
- Circlips must locate properly in the groove.

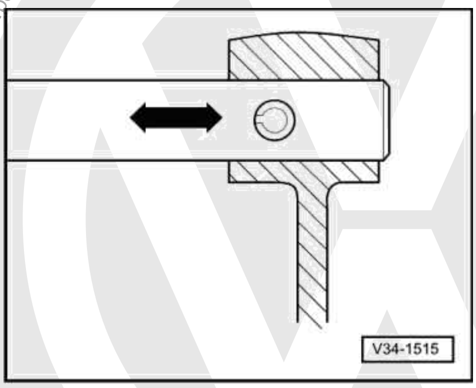

- -> Renew spring pins
  Installation position: Slot longitudinal to line of force.

Bolts and nuts

- Tighten and loosen bolts and nuts for securing covers and housings in a diagonal sequence.
- Especially delicate parts, such as clutch pressure plates, must not be distorted. Loosen and tighten bolts and nuts in stages in a diagonal sequence.
- Tightening torques as specified are for unoiled bolts and nuts.
- Renew self-locking bolts and nuts.
- Ensure with screwed connections that the areas of the contact surfaces as well as the visible surfaces of nuts and bolts are rewaxed after assembly, if necessary.

Bearings

- Install needle bearings with lettered side (thicker metal) towards fitting tool.
- Install new roller bearings as delivered and do not apply additional lubrication.
- Taper roller bearings fitted to one shaft must be renewed as a set. Use same make of bearings if possible!
- Heat inner taper roller bearing races to approx. 100 °C before pressing on.
- Do not interchange outer or inner races of bearings of the same size. The bearings are matched in pairs.

Shims

- Measure shims at several points with a micrometer. Tolerance variations make it possible to find the exact shim thickness required.
- Check for burrs and damage.
- Only install perfect shims.

Synchronizer rings

- Do not interchange. When reusing always fit to the same gear.
- Check for wear and renew if necessary.
- Coat with gear oil before installing.

Selector gears

- Before installing clean and heat on a hot plate to approx. 100 °C.

Protected by copyright. Copying for private or commercial purposes, in part or in whole, is not permitted unless authorised by Volkswagen AG. Volkswagen AG does not guarantee or accept any liability with respect to the correctness of information in this document. Copyright by Volkswagen AG.
satelettronica

- Temperature can be checked with temperature tester V.A.G 1558.

Protected by copyright. Copying for private or commercial purposes, in part or in whole, is not permitted unless authorised by Volkswagen AG. Volkswagen AG does not guarantee or accept any liability with respect to the correctness of information in this document. Copyright by Volkswagen AG.

satelettronica

30 - Clutch

1 - Servicing clutch control

1.1 - Servicing clutch control

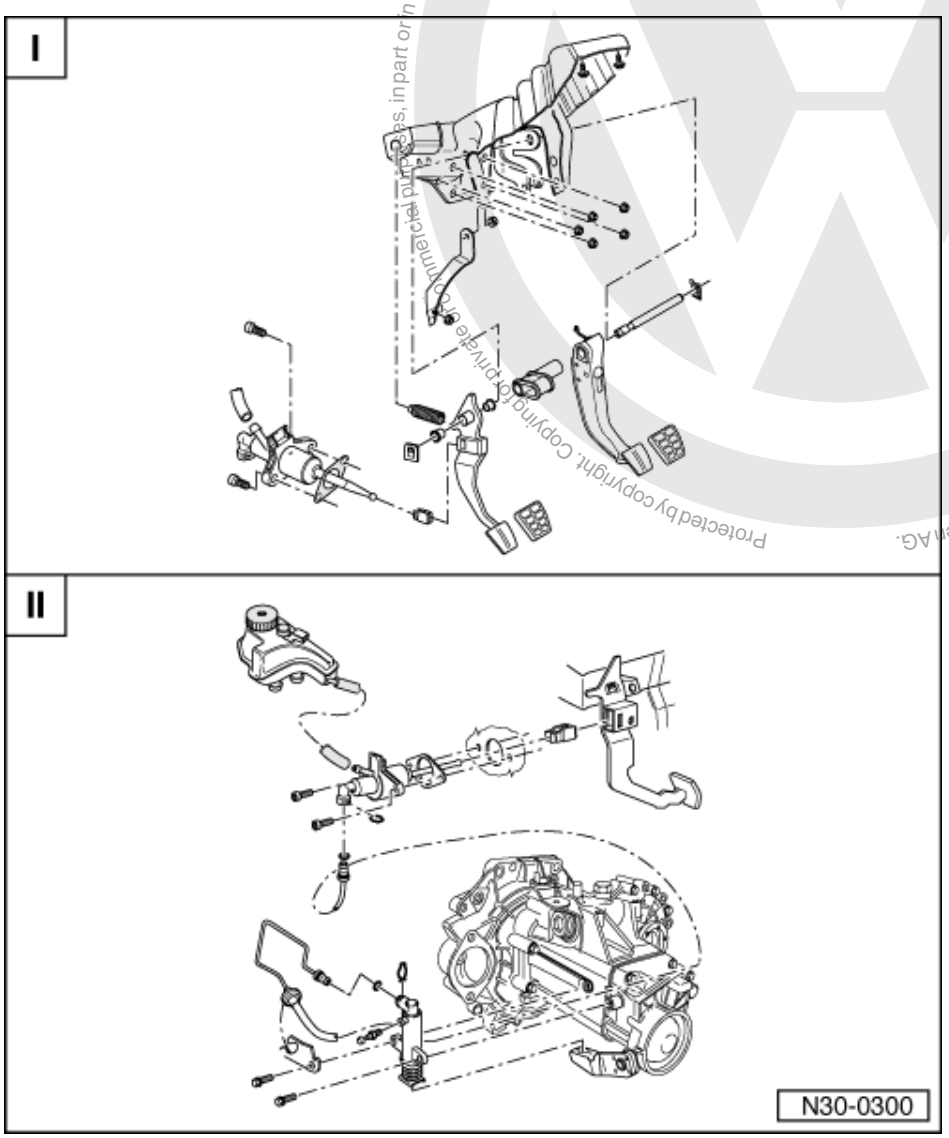

I - Assembly overview - pedal cluster
=>Page 10

III - Assembly overview - hydraulics
=>Page 21

Notes:

- Disconnect battery earth strap.
- For vehicles with coded radio obtain radio code.
- Lubricate all bearings and contact surfaces with poly resin grease part No. G 052 142 A2.

Protected by copyright. Copying for private or commercial purposes, in part or in whole, is not permitted unless authorised by Volkswagen AG. Volkswagen AG does not guarantee or accept any liability with respect to the correctness of information in this document. Copyright by Volkswagen AG.
satelettronica

1.2 - Assembly overview - Pedal cluster

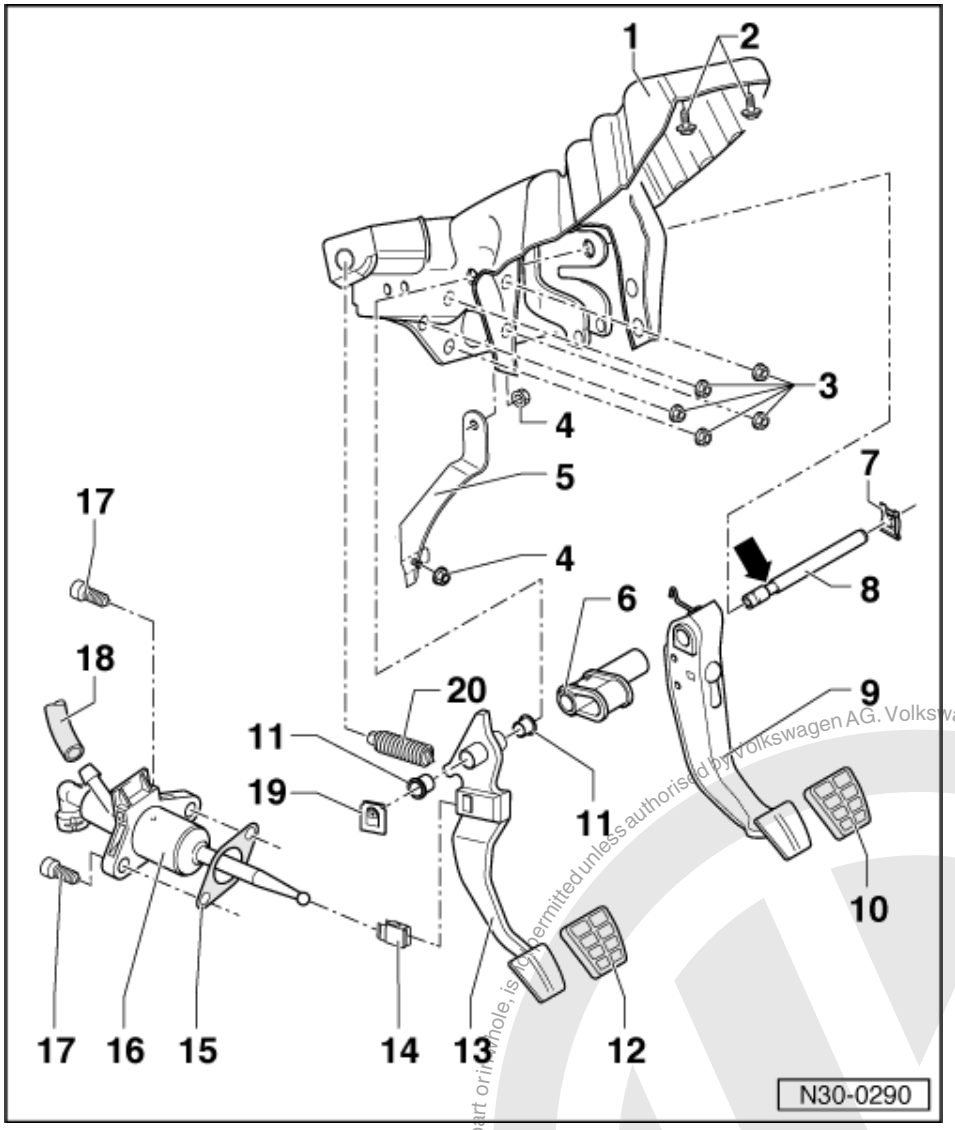

1 Mounting bracket
- Removing and installing => Page 16

2 Hexagon bolt, 25 Nm

3 Self-locking hexagon nut, 25 Nm
- For mounting bracket to stud/brake servo
- Always renew

4 Self-locking hexagon nut, 25 Nm
- Always renew

5 Support

6 Mounting bush
- For mounting the column tube with steering column

7 Securing clip
- Removing and installing => Page 14

Protected by copyright. Copying for private or commercial purposes, in part or in whole, is not permitted unless authorised by Volkswagen AG. Volkswagen AG does not guarantee or accept any liability with respect to the correctness of information in this document. Copyright by Volkswagen AG.
satelettronica

Protected by copyright. Copying for private or commercial purposes, in part or in whole, is not permitted unless authorised by Volkswagen AG. Volkswagen AG does not guarantee or accept any liability with respect to the correctness of information.
Copyright by Volkswagen AG.

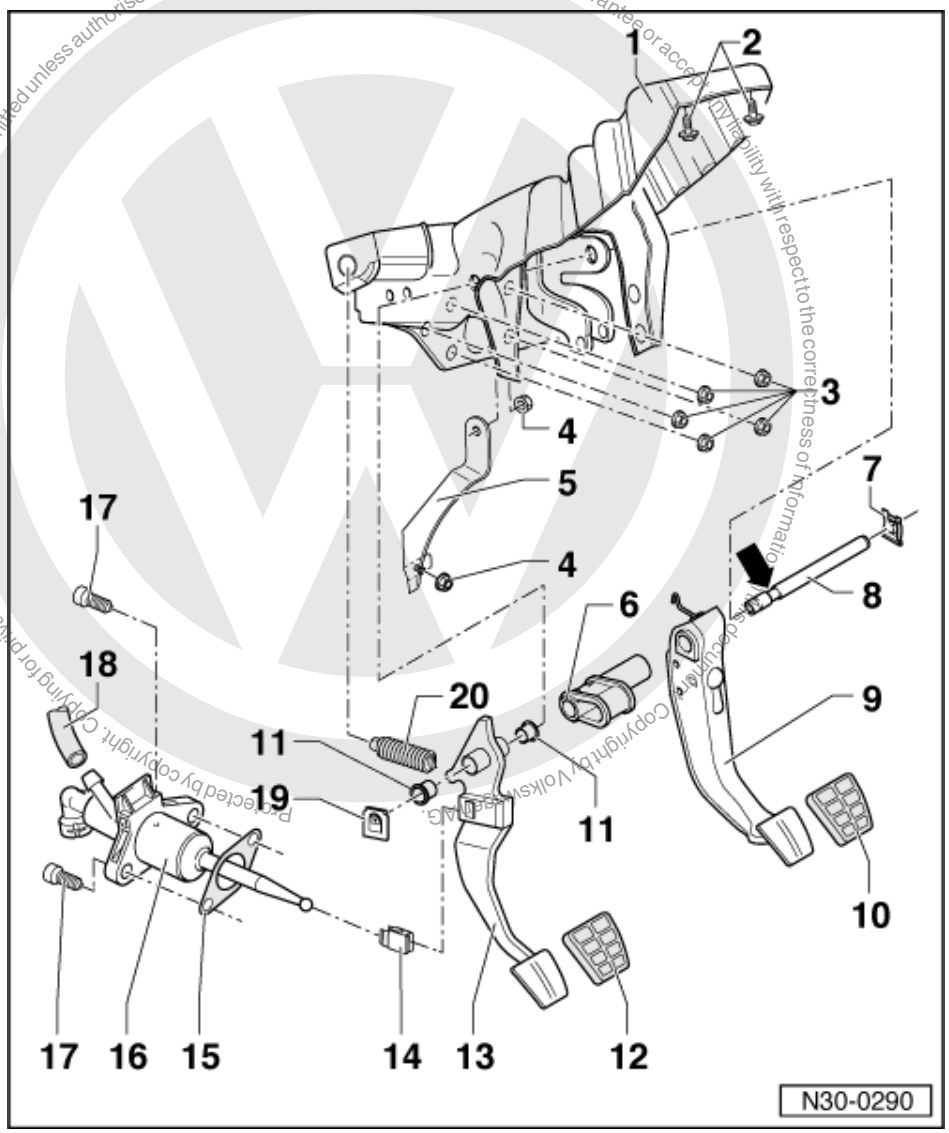

8 Pivot pin for clutch and brake pedal
- Installation position: The groove (arrow) is located on the clutch pedal side.

9 Brake pedal

10 Cap

11 Mounting bush
- Check for wear, renew if necessary
- Knock out with drift
- Press in by clamping in vice, use vice clamps

12 Cap

13 Clutch pedal
- Removing and installing => Page 14

14 Retainer
- Removing and installing => Page 21

satelettronica

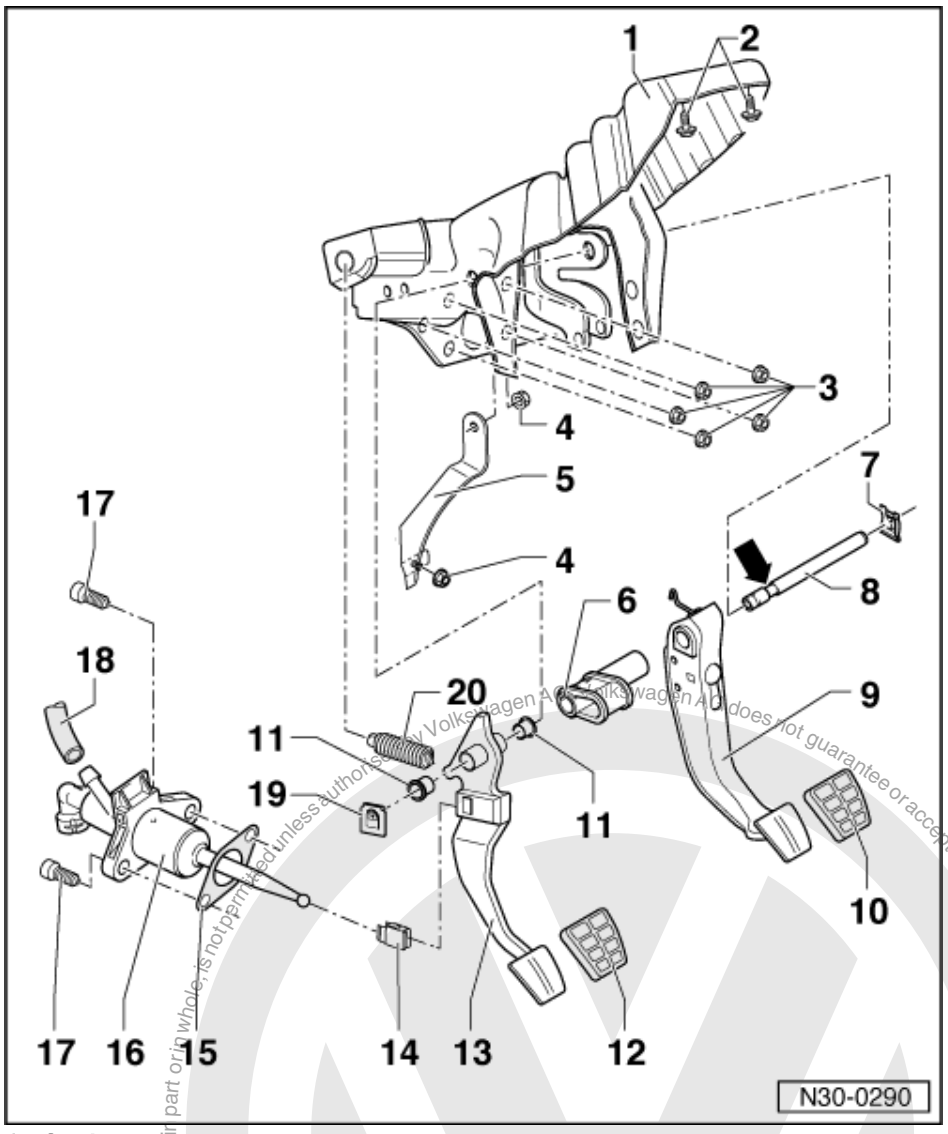

15 Seal
- Always renew

16 Master cylinder
- Removing and installing
  => Page 23

17 Socket head bolt, 20 Nm

18 Supply hose

19 Securing clip
- Removing and installing => Page 14

20 Over-centre spring
- Removing and installing
  =>Page 13

Protected by copyright. Copying for private or commercial purposes, in part or in whole, is not permitted unless authorised by Volkswagen AG. Volkswagen AG does not guarantee or accept any liability with respect to the correctness of information in this document. Copyright by Volkswagen AG.
satelettronica

1.3 - Removing and installing over-centre spring

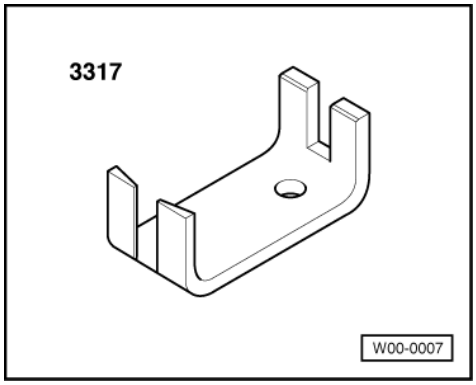

Special tools and workshop equipment required

- 3317 Installation clamp

Removing

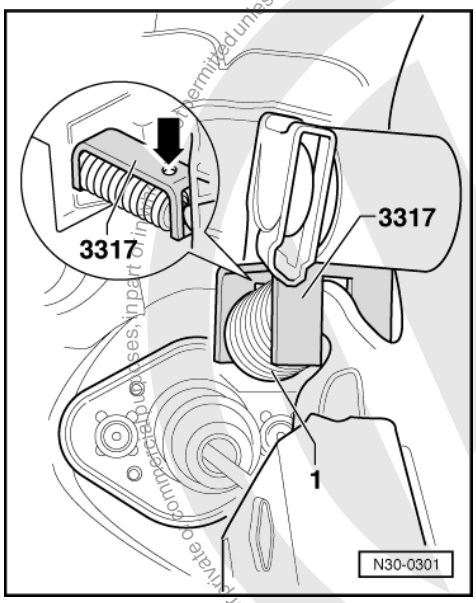

- Take lower trims off lighting switch and steering column and remove driver's stowage compartment.

=> General body repairs, interior; Repair group 68; Stowage compartments, covers, trims Stowage compartments, covers, trims

- Remove driver's footwell cover.

=> General body repairs, interior; Repair group 70; Removing and installing dash panel Removing and installing dash panel

- -> Tension over-centre spring -1- with clutch pedal and fit retaining clamp 3317 from above.

Note:

The drilling (arrow) faces towards clutch pedal.

- Bring clutch pedal to rest position, when doing this take out over-centre spring together with retaining clamp 3317 downwards.

Protected by copyright. Copying for private or commercial purposes, in part or in whole, is not permitted unless authorised by Volkswagen AG. Volkswagen AG does not guarantee or accept any liability with respect to the correctness of information in this document. Copyright by Volkswagen AG.
satelettronica

Installing

- Depress clutch pedal onto stop towards bulkhead.

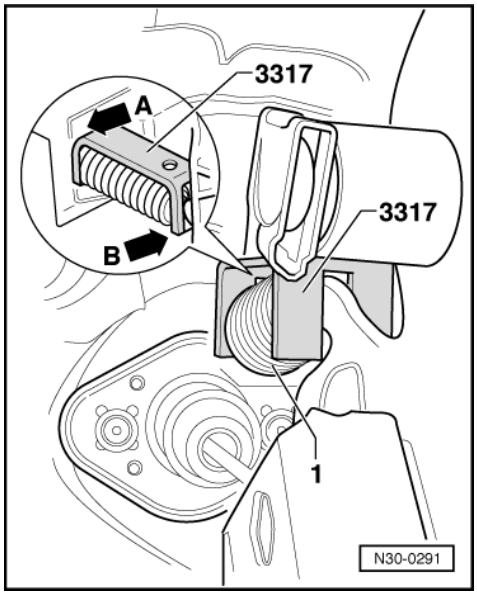

- -> First insert over-centre spring -1- into rear mounting (arrow A).
- Now press front part of over-centre spring upwards until the retaining clamp seats on the mounting lug of the clutch pedal (arrow B).
- Take out retaining clamp whilst bringing clutch pedal to rest position.

1.4 - Removing and installing clutch pedal

Removing

- First check whether a coded radio is fitted. If this is the case obtain the anti-theft coding.
- With the ignition switched off disconnect the battery earth strap.
- Take lower trims off lighting switch and steering column and remove driver's stowage compartment.

=> General body repairs, interior; Repair group 68; Stowage compartments, covers, trims Stowage compartments, covers, trims

- Remove driver's footwell cover.

=> General body repairs, interior; Repair group 70; Removing and installing dash panel Removing and installing dash panel

- Remove clutch pedal switch.
- Removing over-centre spring => Page 13 .
- Separate clutch pedal from master cylinder => Page 23 .

Protected by copyright. Copying for private or commercial purposes, in part or in whole, is not permitted unless authorised by Volkswagen AG. Volkswagen AG does not guarantee or accept any liability with respect to the correctness of information in this document. Copyright by Volkswagen AG.
satelettronica

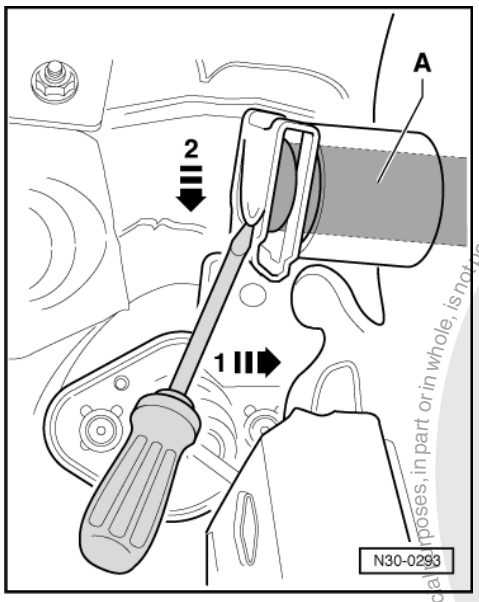

- -> Remove clutch pedal securing clip from pivot pin by levering tab in direction of arrow -1-.
- Then press securing clip in direction of arrow -2- off pivot pin -A-.

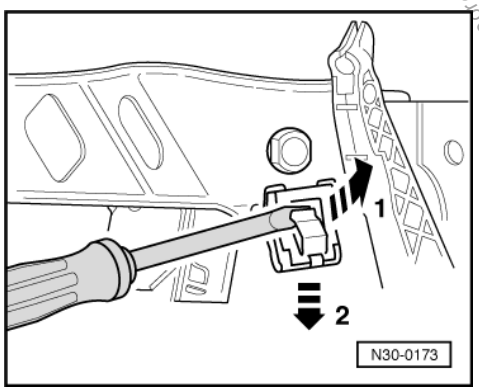

- -> Remove brake pedal securing clip from pivot pin by levering tab up with a screwdriver -arrow 1- and pushing clip off -arrow 2-.
- Pull clutch and brake pedal pivot pin out to the right, until the clutch pedal can be removed.

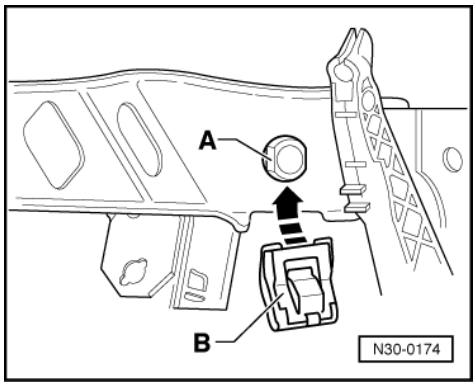

Installing

Installation is carried out in the reverse sequence, when doing this note the following:

- -> Align clutch pedal/brake pedal pivot pin so that the flats -A- are vertical.
- Fit clutch pedal onto pivot pin.
- Then install securing clip for clutch pedal.
- Slide securing clip -B- onto brake pedal end of pivot pin -arrow-.

Protected by copyright. Copyright by Volkswagen AG.
Copying for private or commercial purposes, in part or in whole, is not permitted unless authorised by Volkswagen AG. Volkswagen AG does not guarantee or accept any liability with respect to the correctness of information in this document.
satelettronica

- Engage clutch pedal with operating rod/master cylinder as follows:

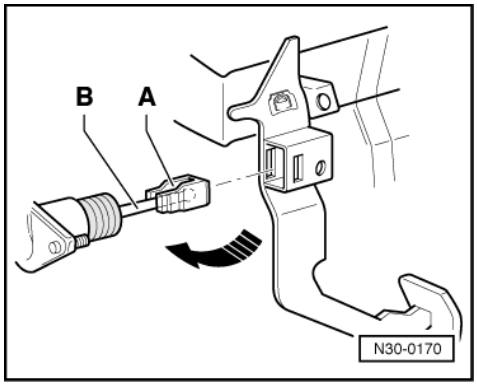

- -> The retainer -A- must be fitted to the master cylinder operating rod -B-.
- To engage press clutch pedal towards bulkhead (direction of arrow). Ensure correctly located.
- Install and adjust new clutch pedal switch.

=> Running gear, ABS self-diagnosis; Repair group 01; Electrical check of ABS, ABS/EDL ITT Mark 20 GI and ITT Mark 20 IE. Electrical check of ABS, ABS/EDL ITT Mark 20 GI and ITT Mark 20 IE.

1.5 - Removing and installing mounting bracket

Removing

- First check whether a coded radio is fitted. If this is the case obtain the anti-theft coding.
- With the ignition switched off disconnect the battery earth strap.
- Take lower trims off lighting switch and steering column and remove driver's stowage compartment.

=> General body repairs, interior; Repair group 68; Stowage compartments, covers, trims Stowage compartments, covers, trims

- Remove driver's footwell cover.

=> General body repairs, interior; Repair group 70; Removing and installing dash panel Removing and installing dash panel

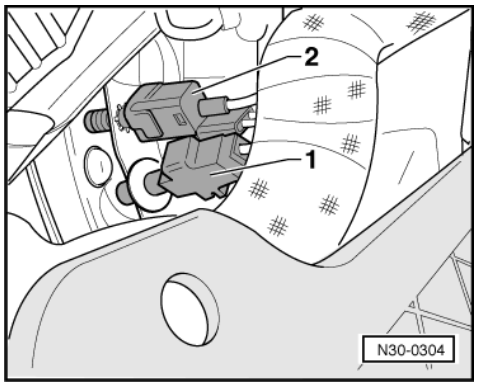

- Remove column tube with steering column.

=> Running gear, axles steering; Repair group 48; Assembly overview: Steering column, column tube, steering wheel and steering wheel with airbag; Removing and installing column tube with steering column Assembly overview: Steering column, column tube, steering wheel and steering wheel with airbag Removing and installing column tube with steering column

- Remove clutch pedal => Page 14 .

satelettronica
Protected by copyright. Copying for private or commercial purposes, in part or in whole, is not permitted unless authorised by Volkswagen AG. Volkswagen AG does not guarantee or accept any liability with respect to the correctness of information in this document. Copyright by Volkswagen AG.

- -> Remove brake light switch -1- and brake pedal switch -2-.

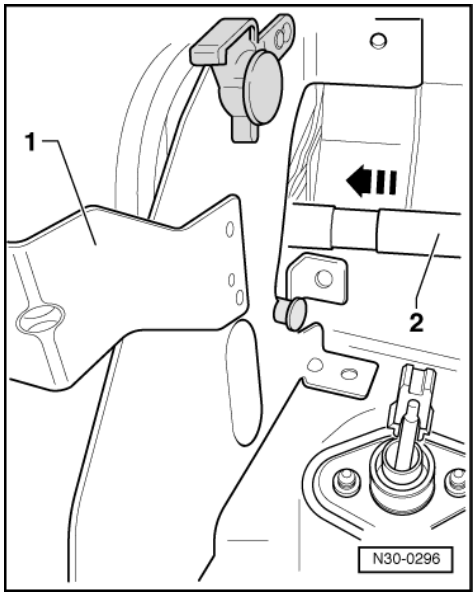

- Separate brake pedal from brake servo.

=> Brake system: Repair group 46; Brake pedal - Assembly overview; Separating brake pedal from brake servo

- -> Unscrew relay carrier -1- from bulkhead and pull into footwell as far as possible.
- Push clutch and brake pedal mounting pin -2- in direction of arrow behind relay carrier until brake pedal hangs loose.
- Remove brake pedal.

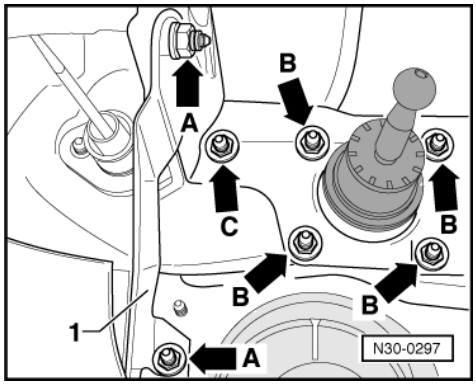

- -> Unscrew strut -1- from mounting bracket and from bulkhead -arrows A-.
- Unscrew nuts -arrows B- from brake servo and nut -arrow C- from bulkhead.

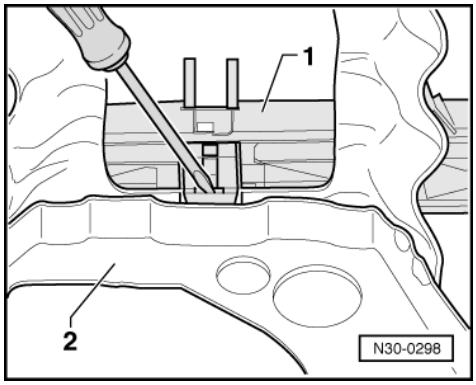

- -> Using a screwdriver, lever up cable channel -1- from mounting bracket -2-.

Protected by copyright. Copying for private or commercial purposes, in part or in whole, is not permitted unless authorised by Volkswagen AG. Volkswagen AG does not guarantee or accept any liability with respect to the correctness of information in this document. Copyright by Volkswagen AG.
satelettronica

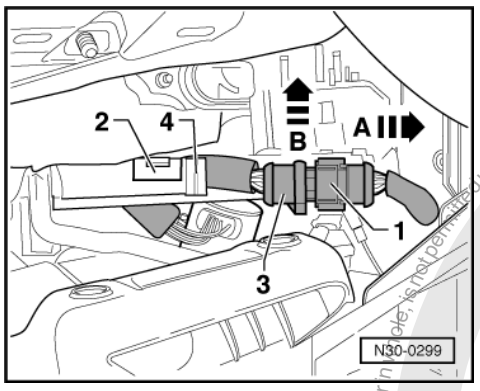

- -> Pull connector -1- off in direction of arrow -A-.
- Unclip clip -2-.
- Pull out connector -3- for accelerator pedal position sender in direction of arrow -B- from cable channel -4- and place to rear.
- Pull brake servo into engine compartment as far as possible.
- Turn mounting bracket 90° to the right and then pull to the left.
- Guide brake servo push rod out of mounting bracket.

- Turn mounting bracket to first position again.
- Remove mounting bracket from passenger compartment.

The accelerator pedal faces to driver's seat.

Installing

- Insert mounting bracket below instrument panel.

The accelerator pedal faces to driver's seat.

- Turn mounting bracket 90° to the right and then pull to the left.
- Guide brake servo push rod into mounting bracket.

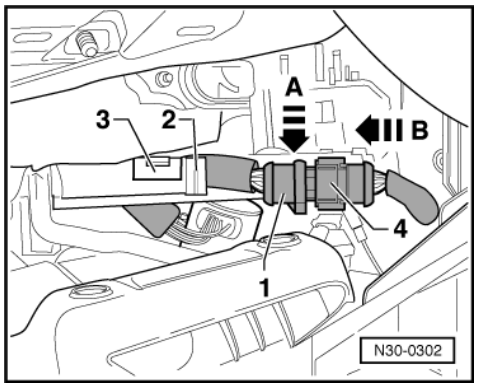

- Turn mounting bracket to first position again.
- -> Guide connector -1- for accelerator pedal position sender from rear above cable channel -2- and insert in direction of arrow -A-.
- Clip in clip -3- .
- Fit connector -4- in direction of arrow -B-.
- Clip top of cable channel onto mounting bracket.

- Press brake servo to bulkhead in installation position.

Protected by copyright. Copying for private or commercial purposes, partially or completely, is not permitted unless authorised by Volkswagen AG. Volkswagen AG does not guarantee or accept any liability with respect to the correctness of information in this document. Copyright by Volkswagen AG.
satelettronica

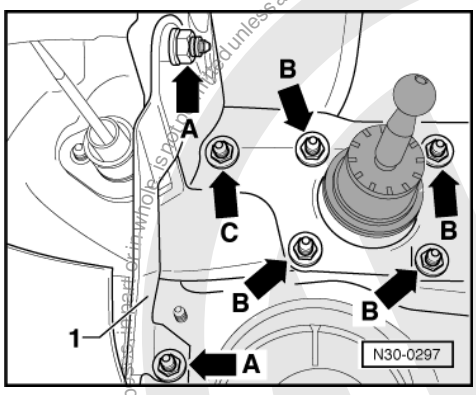

- -> Tighten nuts -arrows B- to brake servo and nut -arrow C- to bulkhead to 25 Nm.
- Tighten strut -1- on mounting bracket and bulkhead to 25 Nm -arrows A-.
- Insert brake pedal.

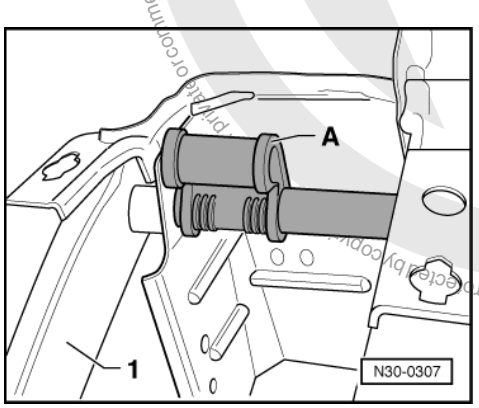

- -> Fit bearing bracket -A- for mounting column tube with steering column.

Installation position:

The bearing bush lip -A- is on the clutch pedal side -1- and faces the driver's seat.

- Move clutch and brake pedal pivot pin to the right onto stop.
- Tighten relay carrier to bulkhead.

- Install clutch pedal => from Page 15 .

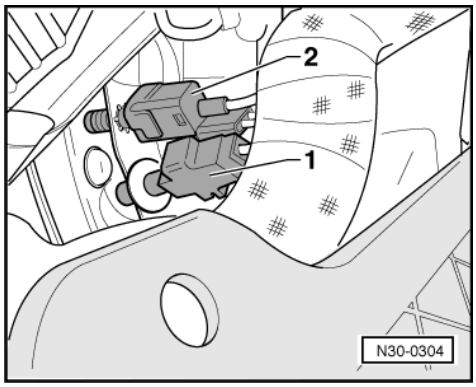

- -> Install brake light switch -1- and new brake pedal switch -2-.
- Adjust brake light switch.

=> Running gear self-diagnosis for ABS; Repair group 01; Electrical check of ABS, ABS/EDL ITT Mark 20 GI and ITT Mark 20 IE; Adjusting brake light switch. Electrical check of ABS, ABS/EDL ITT Mark 20 GI and ITT Mark 20 IE Adjusting brake light switch.

- Then adjust brake pedal switch.

satelettronica

=> Running gear self-diagnosis for ABS; Repair group 01; Electrical check of ABS, ABS/EDL ITT Mark 20 GI and ITT Mark 20 IE; Adjusting brake pedal switch. Electrical check of ABS, ABS/EDL ITT Mark 20 GI and ITT Mark 20 IE Adjusting brake pedal switch.

- Install column tube with steering column.

=> Running gear, axles steering; Repair group 48; Assembly overview: Steering column, column tube, steering wheel and steering wheel with airbag; Removing and installing column tube with steering column Assembly overview: Steering column, column tube, steering wheel and steering wheel with airbag Removing and installing column tube with steering column

- Install driver's footwell cover.

=> General body repairs, interior; Repair group 70; Removing and installing dash panel Removing and installing dash panel

- Install driver's stowage compartment.

=> General body repairs, interior; Repair group 68; Stowage compartments, covers, trims Stowage compartments, covers, trims

1.6 - Assembly overview - Hydraulic system

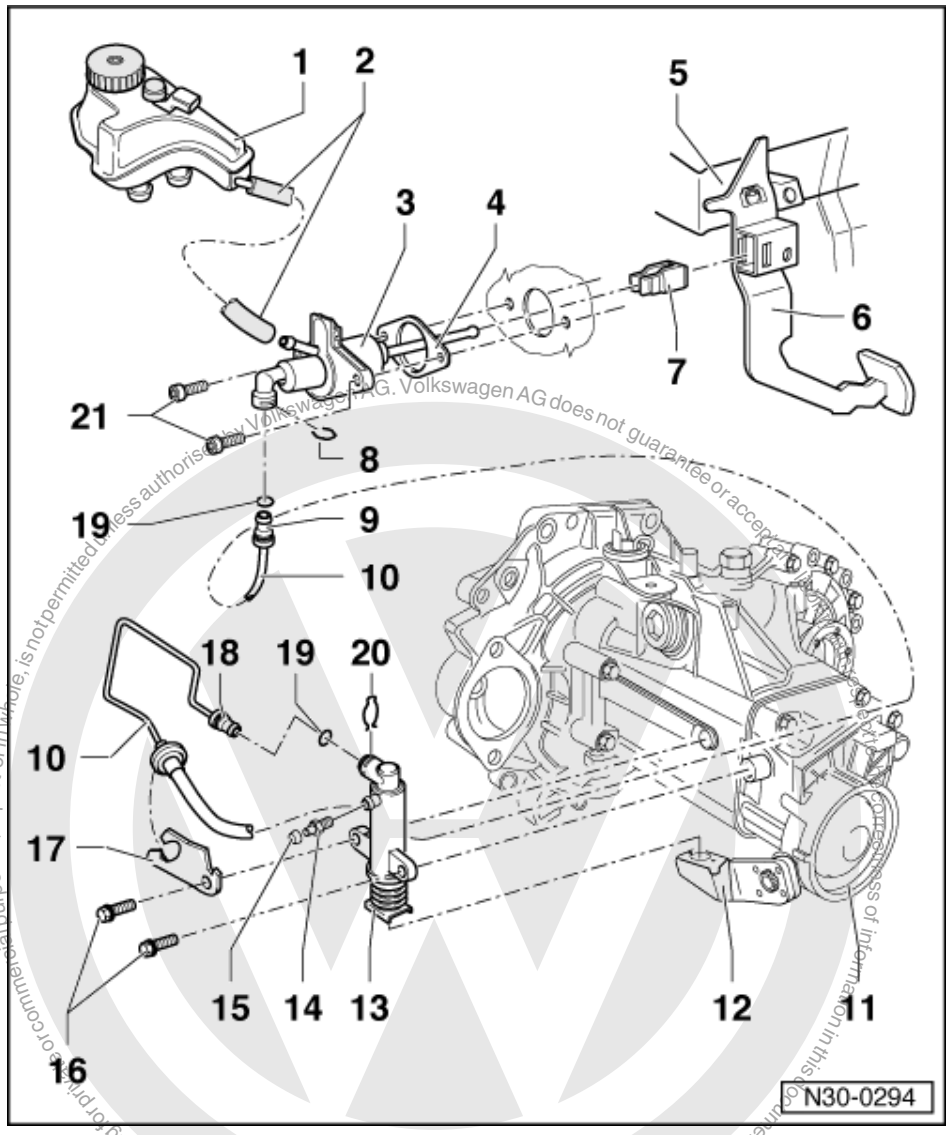

satelettronica

1 Brake fluid reservoir
2 Supply hose
3 Master cylinder
- Removing and installing => Page 23

4 Seal
- Always renew

5 Mounting bracket
- Removing and installing => Page 16

6 Clutch pedal
- Removing and installing => Page 14

7 Retainer
- Replace only with master cylinder removed
- Removing =>Fig. 1
- Pressing on =>Fig. 2

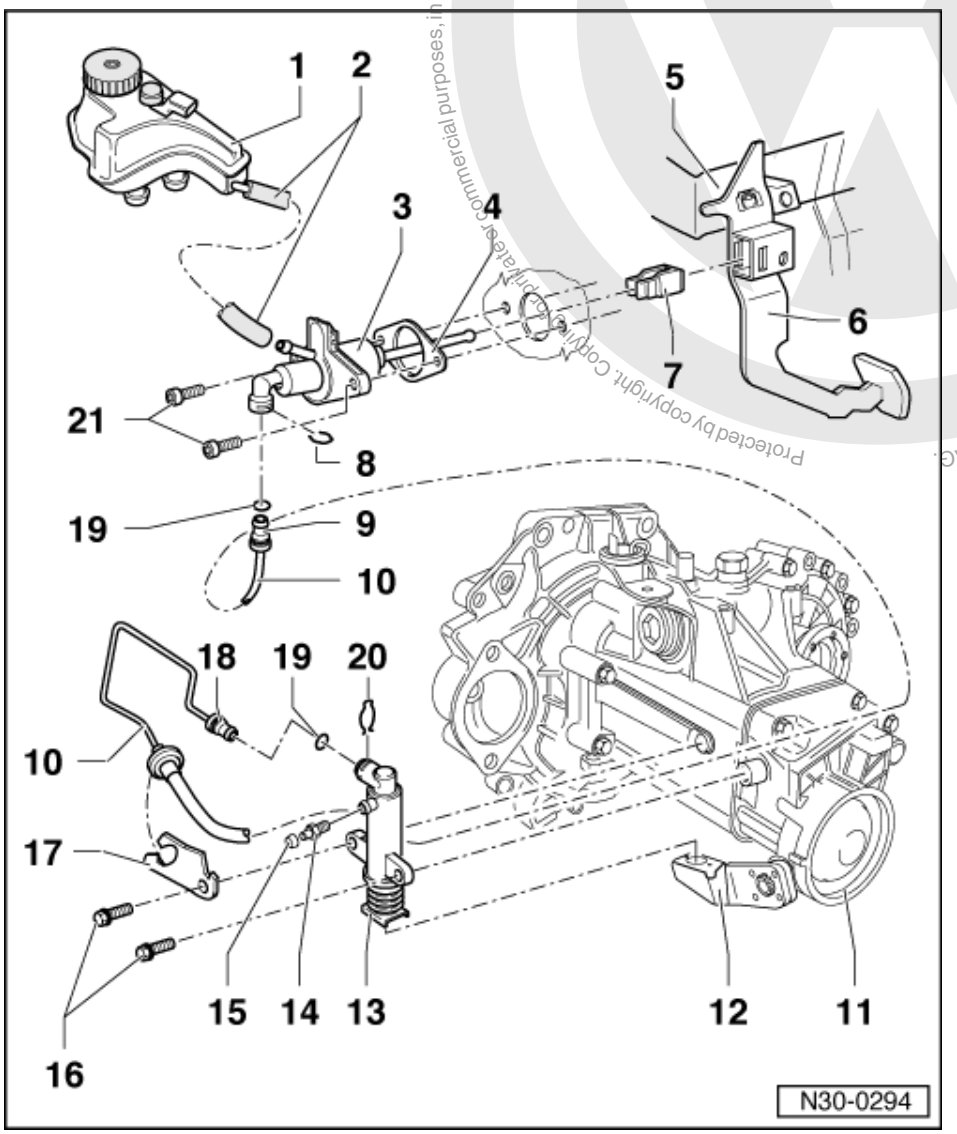

8 Clip
- Pull clip out onto limit stop when removing the hose/pipe.

9 Push fit pipe connection

10 Pipe/hose assembly
- Allocate using parts catalogue

11 Gearbox

Protected by copyright. Copyright by Volkswagen AG. Volkswagen AG does not guarantee or accept any liability with respect to the correctness of information in this document. Copyright by Volkswagen AG. Copying for commercial purposes, in part or in whole, is not permitted unless authorised by Volkswagen AG.
satelettronica

12 Release lever
- Removing and installing
  => Page 115

13 Slave cylinder
- Bleeding => Page 25

14 Bleed valve
- Bleeding clutch system
  => Page 25

15 Dust cap

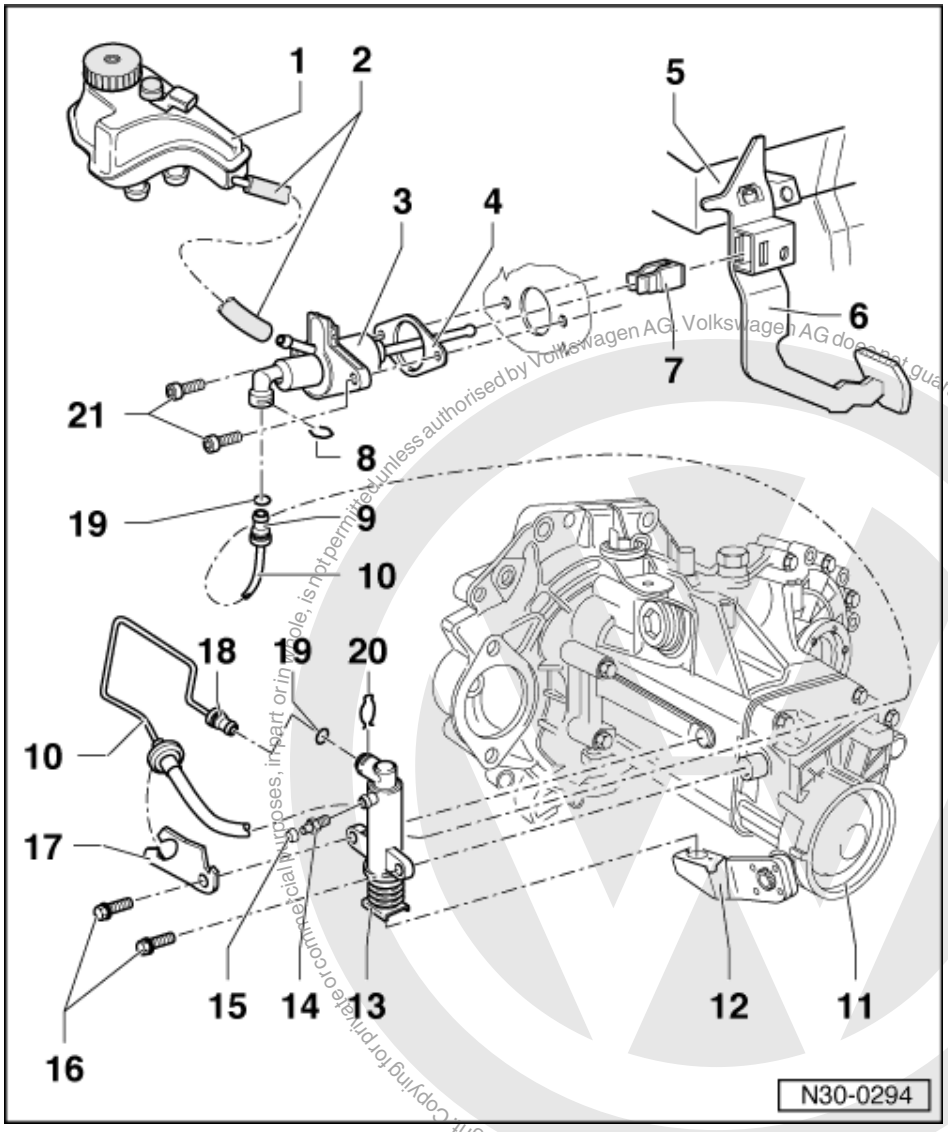

16 Collared securing bolt, 25 Nm
17 Bracket
18 Push fit pipe connection
19 Seal
- Always renew
- Insert with brake fluid
- Pull onto pipe/hose connection

20 Clip
21 Socket head bolt, 20 Nm

Protected by copyright. Copying for private or commercial purposes, in part or in whole, is not permitted unless authorised by Volkswagen AG. Volkswagen AG does not guarantee or accept any liability with respect to the correctness of information in this document. Copyright by Volkswagen AG.
satelettronica

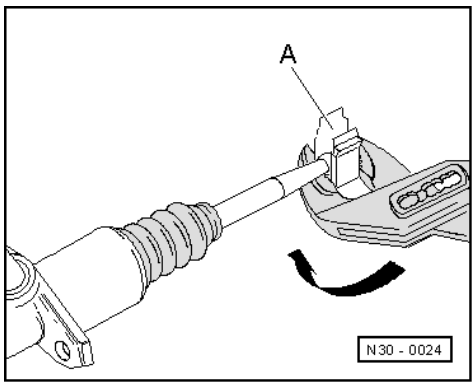

-> Fig.1 Lever retainer -A- off in direction of arrow

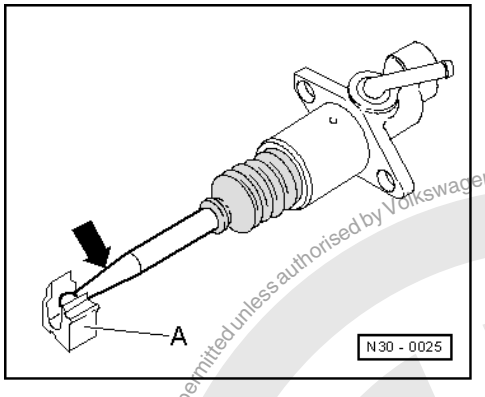

-> Fig.2 Press master cylinder operating rod in retainer -A- in direction of arrow

1.7 - Removing and installing master cylinder

Special tools and workshop equipment required

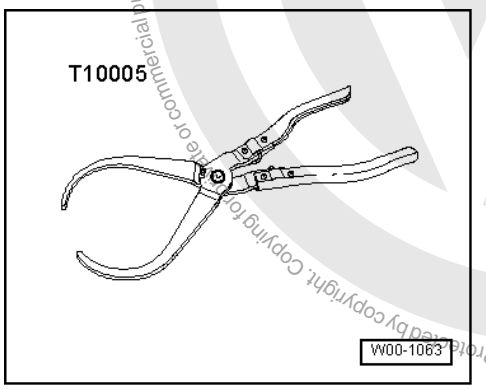

- T10005 Pliers

Removing

- Remove coolant expansion tank and lay to one side.

Protected by copyright. Copying for private or commercial purposes, in part or in whole, is not permitted unless authorised by Volkswagen AG. Volkswagen AG does not guarantee or accept any liability with respect to the correctness of information in this document. Copyright by Volkswagen AG.
satelettronica

Note:

Do not open cooling system.

- Then remove air cleaner if fitted on left-hand side of engine compartment

=> Repair group 24; Servicing injection system Servicing injection system

- Place sufficient lint-free cloths under the master cylinder.

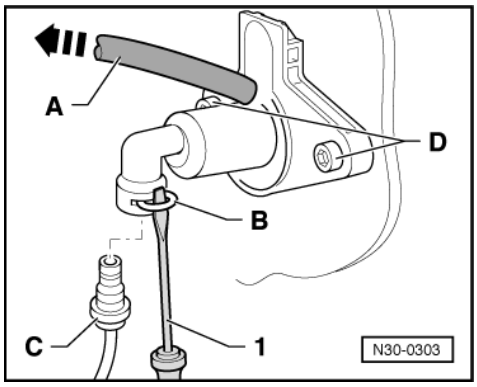

- -> Pull off return pipe/hose hose -A- to brake fluid reservoir and seal.
- Lever clip -B- for pipe/hose assembly out from master cylinder with a screwdriver -1-.
- Pull pipe/hose assembly -C- out from master cylinder and seal.
- Remove bolts -D-.
- Take lower trims off lighting switch and steering column and remove driver's stowage compartment.

=> General body repairs, interior; Repair group 68; Stowage compartments, covers, trims Stowage compartments, covers, trims

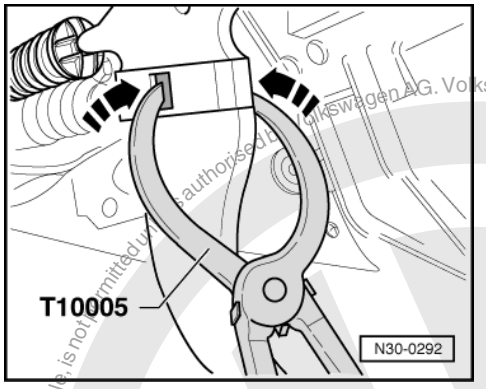

- Remove driver's footwell cover.

=> General body repairs, interior; Repair group 70; Removing and installing dash panel Removing and installing dash panel

-> Separate master cylinder operating rod from clutch pedal as follows:

- Carefully pull clutch pedal towards passenger compartment.
- Press both sides of mounting, using screwdriver, one after another inwards (arrows).
- Pull piston rod with mounting out of pedal forwards.

satelettronica

Protected by copyright. Copying for private or commercial purposes, in part or in whole, is not permitted unless authorised by Volkswagen AG. Volkswagen AG does not guarantee or accept any liability with respect to the correctness of information in this document. Copyright by Volkswagen AG.

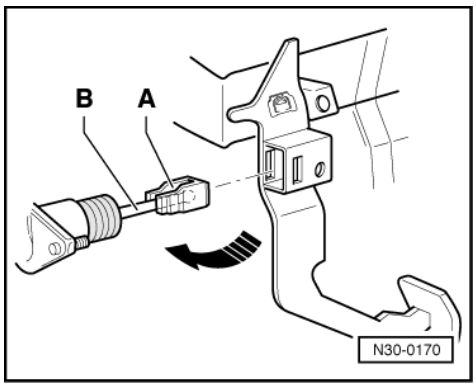

- Take out master cylinder from engine compartment.

Installing
Installation is carried out in the reverse sequence, when doing this note the following:
- -> The retainer -A- must be fitted to the master cylinder operating rod -B-.
- To engage press clutch pedal towards bulkhead (direction of arrow). Ensure correctly located.
- Bleeding clutch system after installing master cylinder=>Page 25 .

1.8 - Bleeding clutch system

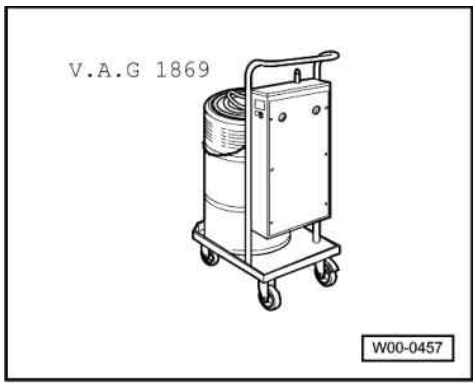

Special tools and workshop equipment required
- V.A.G 1869 Brake filling and bleeder unit

- Brake fluid specifications.

=> Brake systems; repair group 47 Booklet, Bleeding brake system, vehicles with or without ABS
Note:
Prefilling system is not necessary!
- Connect brake filling and bleeder unit V.A.G 1869.

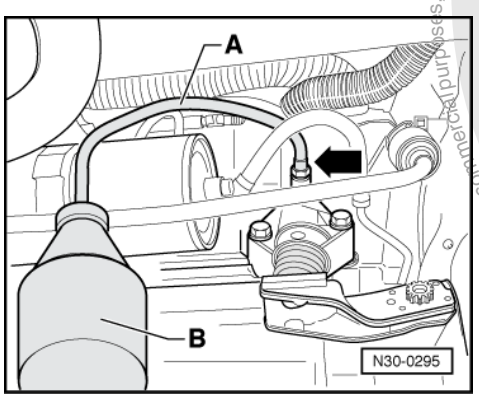

Protected by copyright. Copying for private or commercial purposes, in part or in whole, is not permitted unless authorised by Volkswagen AG. Volkswagen AG does not guarantee or accept any liability with respect to the correctness of information in this document. Copyright by Volkswagen AG.
satelettronica

- -> Connect bleed hose -A- to collector bottle -B- of brake filler and bleeder unit.
- Connect bleed hose -A- to slave cylinder (arrow) and open bleed valve.
- Depress clutch pedal several times after completion of bleeding process.

2 - Servicing clutch

2.1 - Servicing clutch

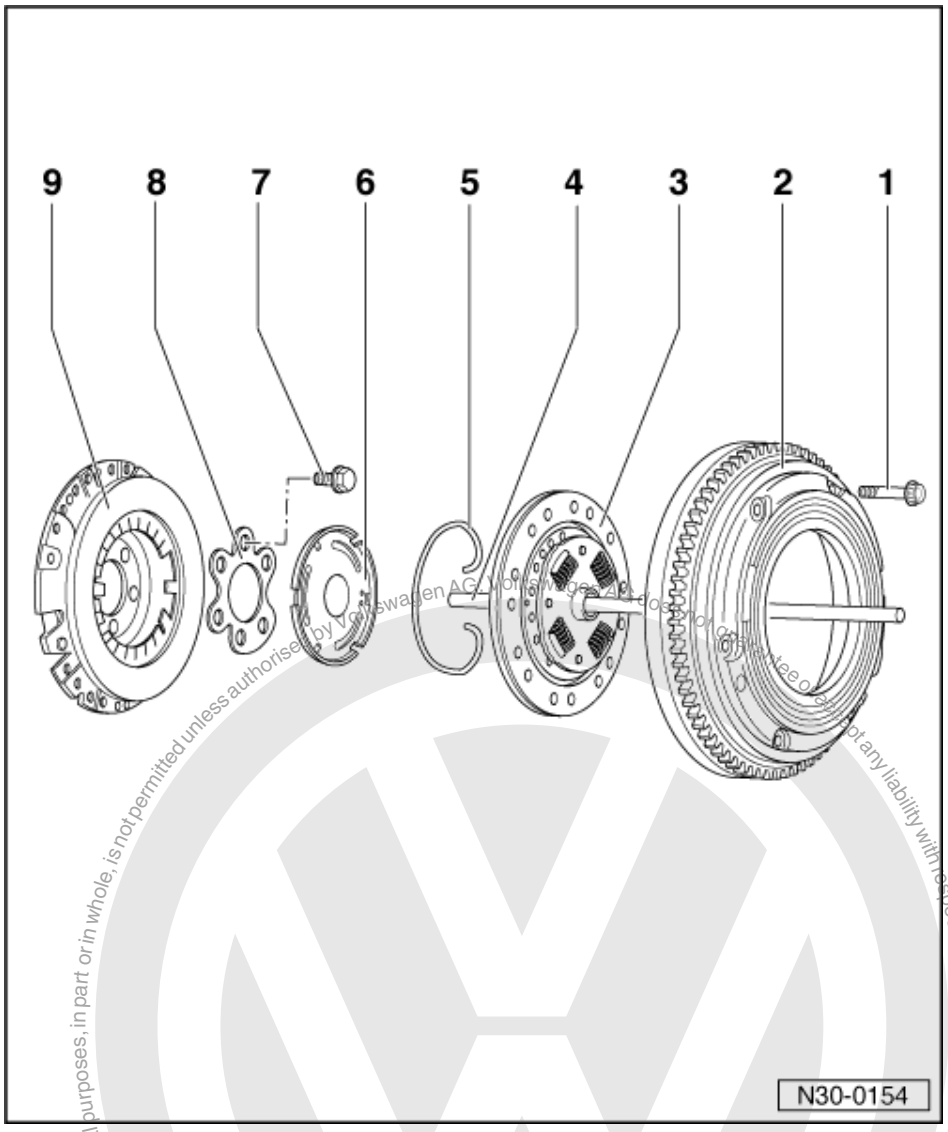

(Gearbox removed)

Notes:

- Before replacing the clutch and pressure plate note fault finding transmission No.9 - Defects on the clutch and clutch mechanism
- Replace clutch plates and pressure plates with damaged or loose rivets
- Select correct clutch plate and pressure plate according to parts list and engine code.
- Assemble clutch so that the flywheel centralizing pin grips in the pressure plate centralizing hole or centralizing slot. Otherwise TDC on flywheel is not correct.

1 Twelve point bolt, 20 Nm

satelettronica

- Loosen and tighten gradually and diagonally

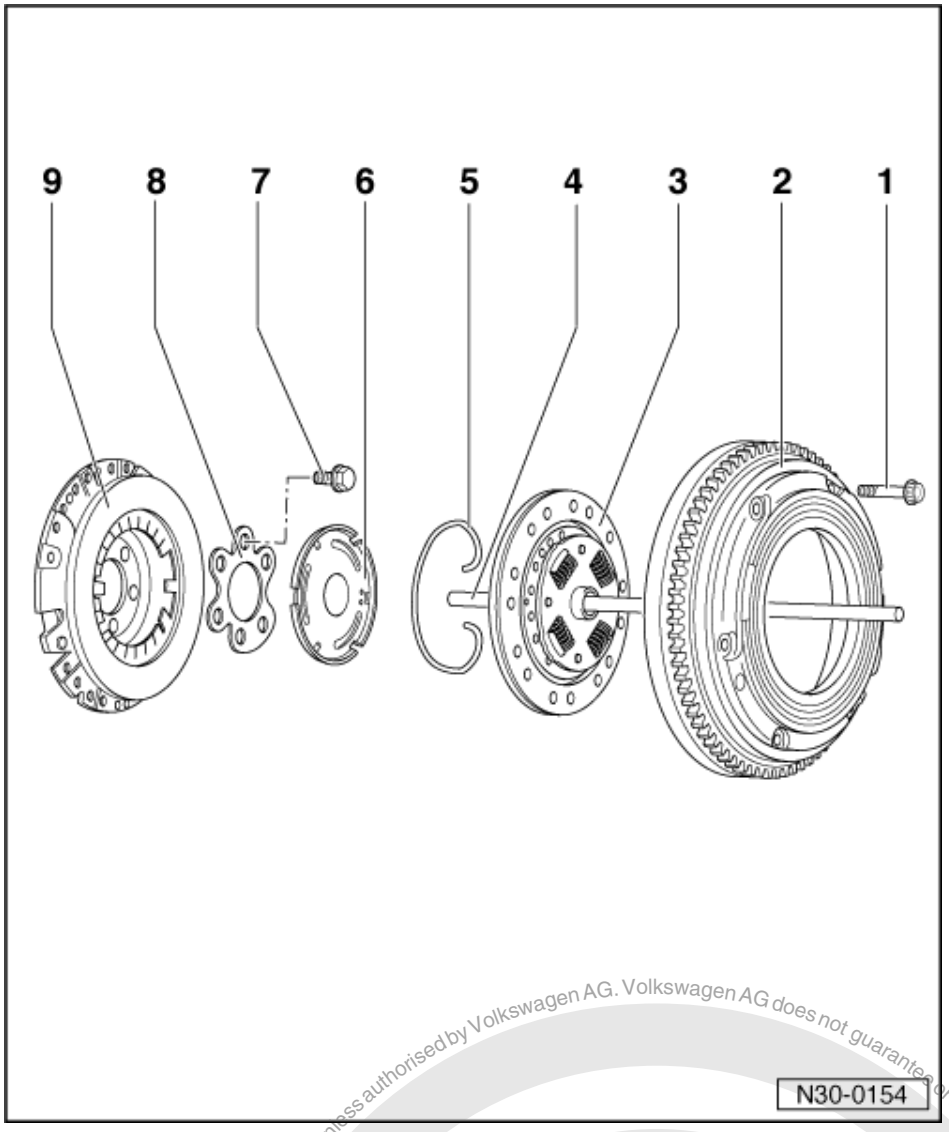

2 Flywheel
- Removing and installing

=> Repair group13

- Ensure centring pins are a tight fit
- Contact surface for clutch lining must be free of grooves, oil and grease
- TDC sender insertion depth must be adapted to suit the sizes of the various flywheels. For this reason there are two different coloured sealing bolts in the clutch housing. Allocation => Page 107 .

3 Clutch plate
- Centring => Page 31
- Diameter
  =>from page 2

Protected by copyright. Copying for private or commercial purposes, in part or in whole, is not permitted unless authorised by Volkswagen AG. Volkswagen AG does not guarantee or accept any liability with respect to the correctness of information in this document. Copyright by Volkswagen AG.
satelettronica

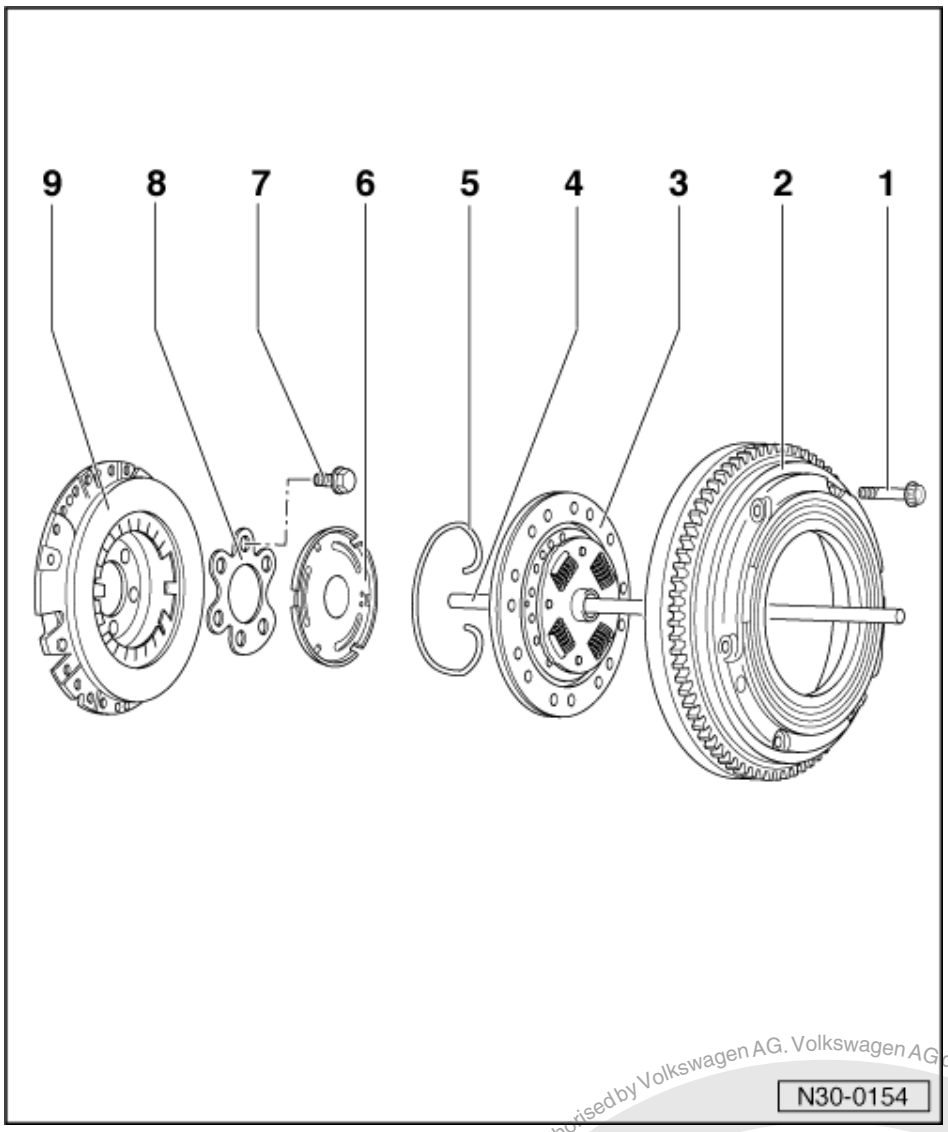

4 Clutch push rod
- Grease area of input shaft guide sleeve

5 Retaining ring

6 Pressure plate
- Coat contact surface and clutch push rod mounting with a very thin coating of G 000 100 grease

7 Pressure plate to crankshaft securing bolt
- Removing and installing

=> Repair group13; Removing and installing sealing flange and pressure plate

8 Intermediate plate
- Installation position => Page 30

9 Pressure plate
- Removing and installing => from Page 29
- Maximum pressure plate distortion, inside 0.2 mm
- Renew pressure plate with damaged or loose rivet connections

satelettronica
Protected by copyright. Copying for private or commercial purposes, in part or in whole, is not permitted unless authorised by Volkswagen AG. Volkswagen AG does not guarantee or accept any liability with respect to the correctness of information in this document. Copyright by Volkswagen AG.

2.2 - Removing and installing clutch

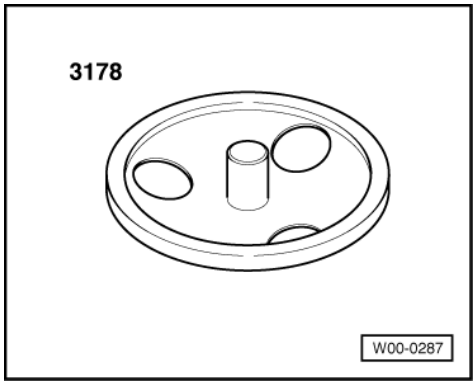

Special tools and workshop equipment required

- 3178 Centring disk

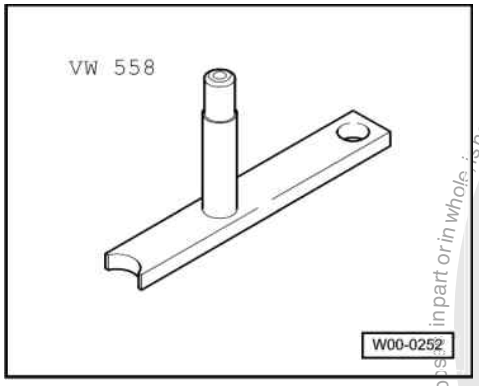

- VW 558 Counter hold tool

Removing

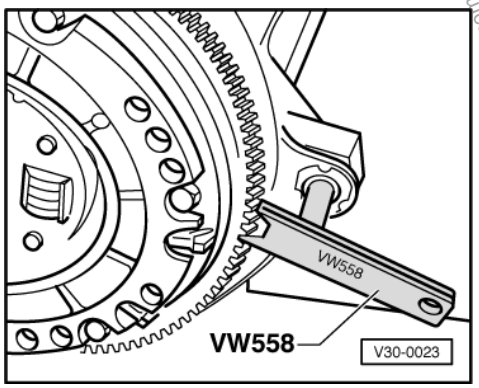

- -> Remove flywheel, do this by arresting with counter hold VW 558.
- Take off clutch plate.

Protected by copyright. Copying for private or commercial purposes, in part or in whole, is not permitted unless authorised by Volkswagen AG. Volkswagen AG does not guarantee or accept any liability with respect to the correctness of information in this document. Copyright by Volkswagen AG.
satelettronica

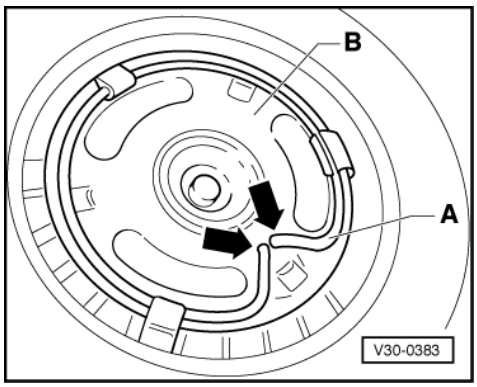

- -> Lever retaining clip -A- for release plate -B- out of holes (arrows) with a screwdriver and remove.
- Remove release plate -B-.

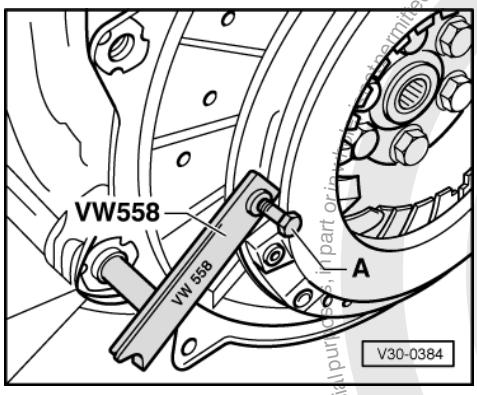

- -> Unbolt pressure plate, to do this lock counter hold tool VW 558 on pressure plate with bolt -A-.
- Take off pressure plate and intermediate plate.

Installing

- Fit pressure plate.
- Fit intermediate plate.

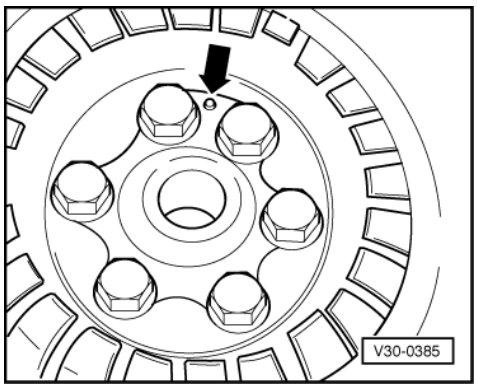

- -> Intermediate plate installation position: raised portion (arrow) points away from pressure plate.
- Insert new securing bolts.
- Tighten securing bolts, do this by locking pressure plate with counter hold VW 558 as for removing. Securing bolt tightening torque.

=> Repair group 13; Removing and installing flange and pressure plate Removing and installing flange and pressure plate

Protected by copyright. Copying for private or commercial purposes, in part or in whole, is not permitted unless authorised by Volkswagen AG. Volkswagen AG does not guarantee or accept any liability with respect to the correctness of information in this document. Copyright by Volkswagen AG.
satelettronica

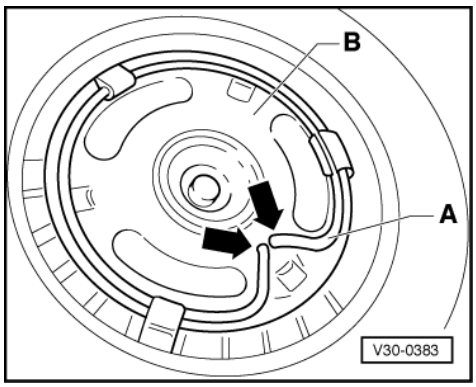

- -> Fit release plate -B- and secure to pressure plate with retaining clip -A-. Insert wire ends into holes (arrows) in pressure plate.
- Coat clutch plate splines with a very thin film of G 000 100 grease. Then slide clutch plate back and forth on gearbox input shaft until the hub slides on shaft easily. Excessive grease must be removed.
- Fit clutch plate with flywheel to pressure plate.

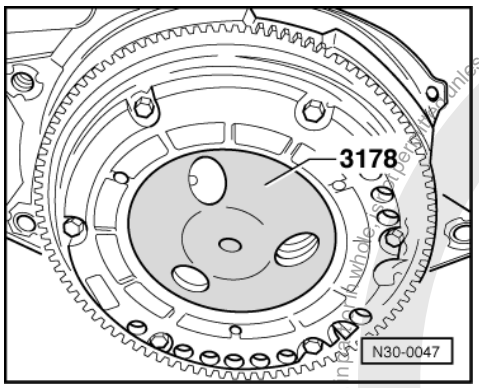

- -> Insert centralizing disk and tighten flywheel bolts alternately and diagonally.

Tightening torques

Pressure plate to engine:

=> Repair group 13; Removing and installing flange and pressure plate Removing and installing flange and pressure plate

Flywheel to pressure plate: 20 Nm

Protected by copyright. Copying for private or commercial purposes, in part or in whole, is not permitted unless authorised by Volkswagen AG. Volkswagen AG does not guarantee or accept any liability with respect to the correctness of information in this document. Copyright by Volkswagen AG.
satelettronica

34 - Controls, Housing

1 - Servicing gear selector mechanism

1.1 - Servicing gear selector mechanism

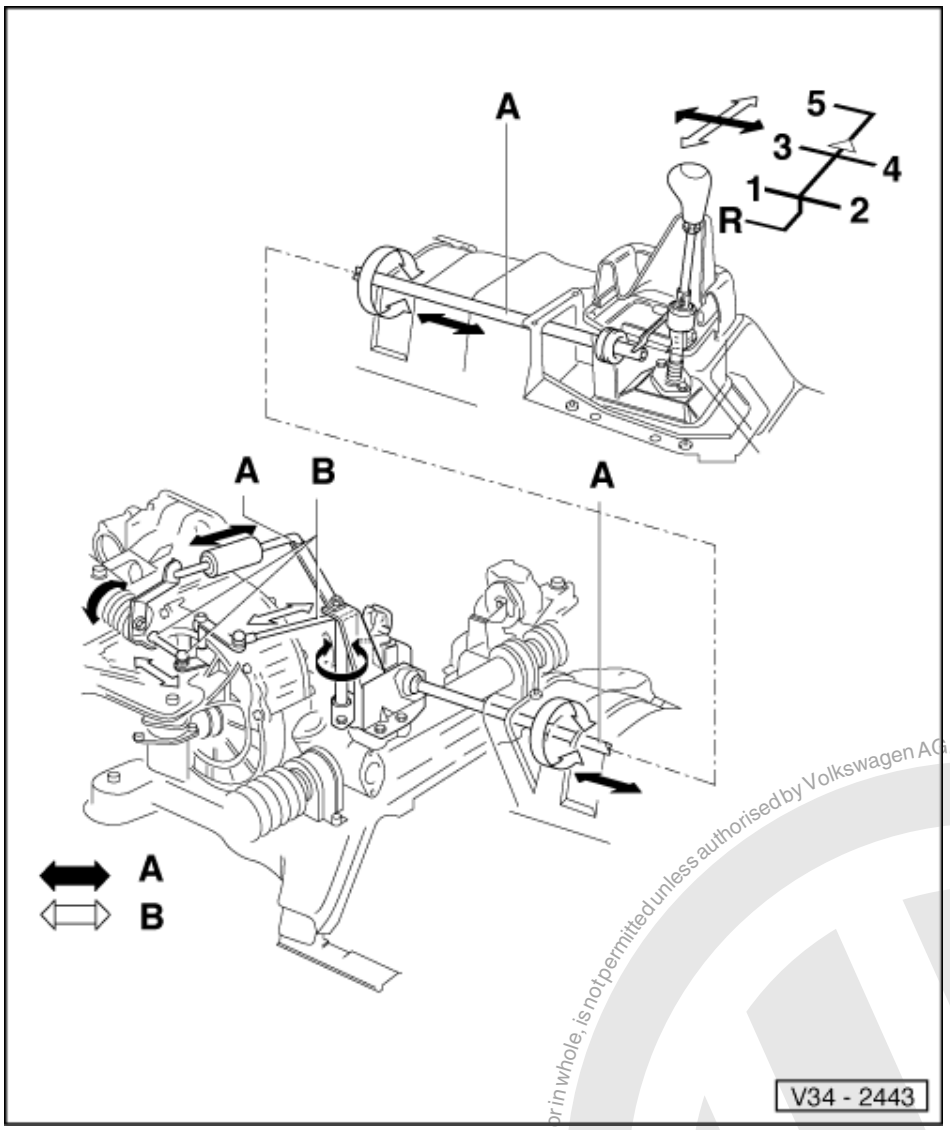

1.2 - Installation position of gear selector mechanism

A - Gear selector rod movement
B - Gate selector rod

Double headed arrow -A- Gear selection movement

Double headed arrow -B- Gate selection movement

satelettronica
Protected by copyright. Copying for private or commercial purposes, in part or in whole, is not permitted unless authorised by Volkswagen AG. Volkswagen AG does not guarantee or accept any liability with respect to the correctness of information in this document. Copyright by Volkswagen AG.

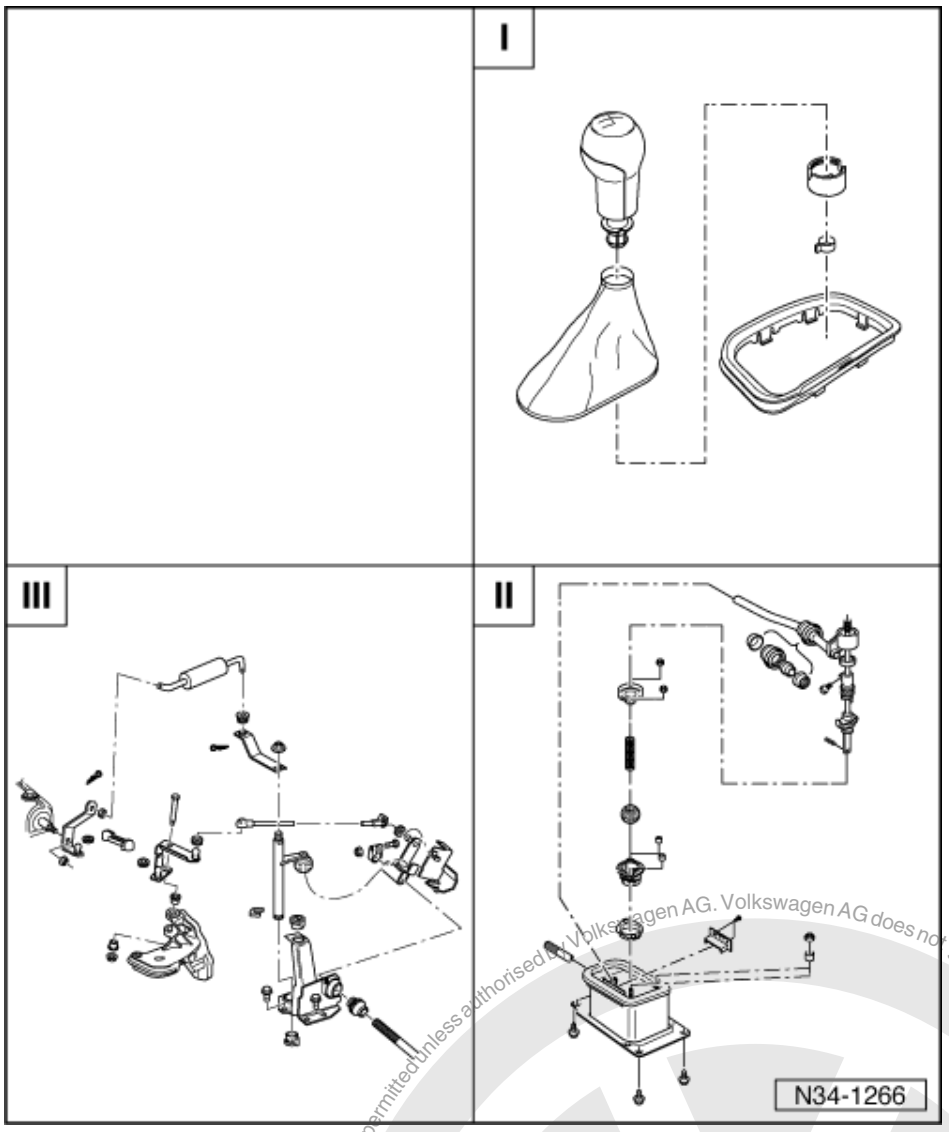

I - Removing and installing selector lever and gaiter => Page 35
II - Assembly overview - Gear stick housing/gear stick => Page 36
III - Assembly overview - Selector mechanism relay points on gearbox => Page 41

Removing and installing gear stick/selector rods => Page 45

Adjusting selector mechanism => Page 47

Notes:

- Before working on the selector mechanism, disconnect earth strap from the battery in the engine compartment.
- Note radio code on vehicles with coded radio.
- Lubricate all bearings and contact surfaces with poly resin grease part No. G 052 142 A2.

Protected by copyright. Copying for private or commercial purposes, partly or in whole is not permitted unless authorised by Volkswagen AG. Volkswagen AG does not guarantee or accept any liability with respect to the correctness of information in this document. Copyright by Volkswagen AG.
satelettronica

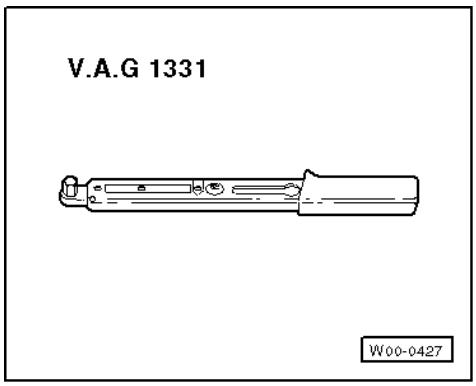

Special tools and workshop equipment required

- V.A.G 1331 Torque wrench

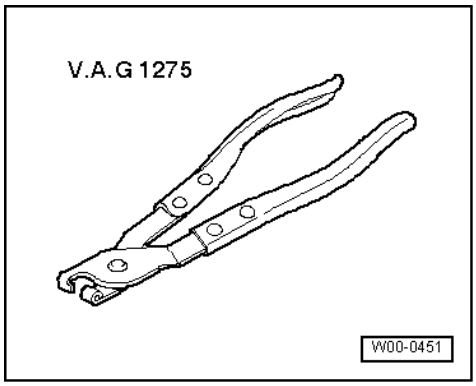

- V.A.G 1275 Pliers

Protected by copyright. Copying for private or commercial purposes, in part or in whole, is not permitted unless authorised by Volkswagen AG. Volkswagen AG does not guarantee or accept any liability with respect to the correctness of information in this document. Copyright by Volkswagen AG.
satelettronica

1.3 - Removing and installing selector lever knob and gaiter

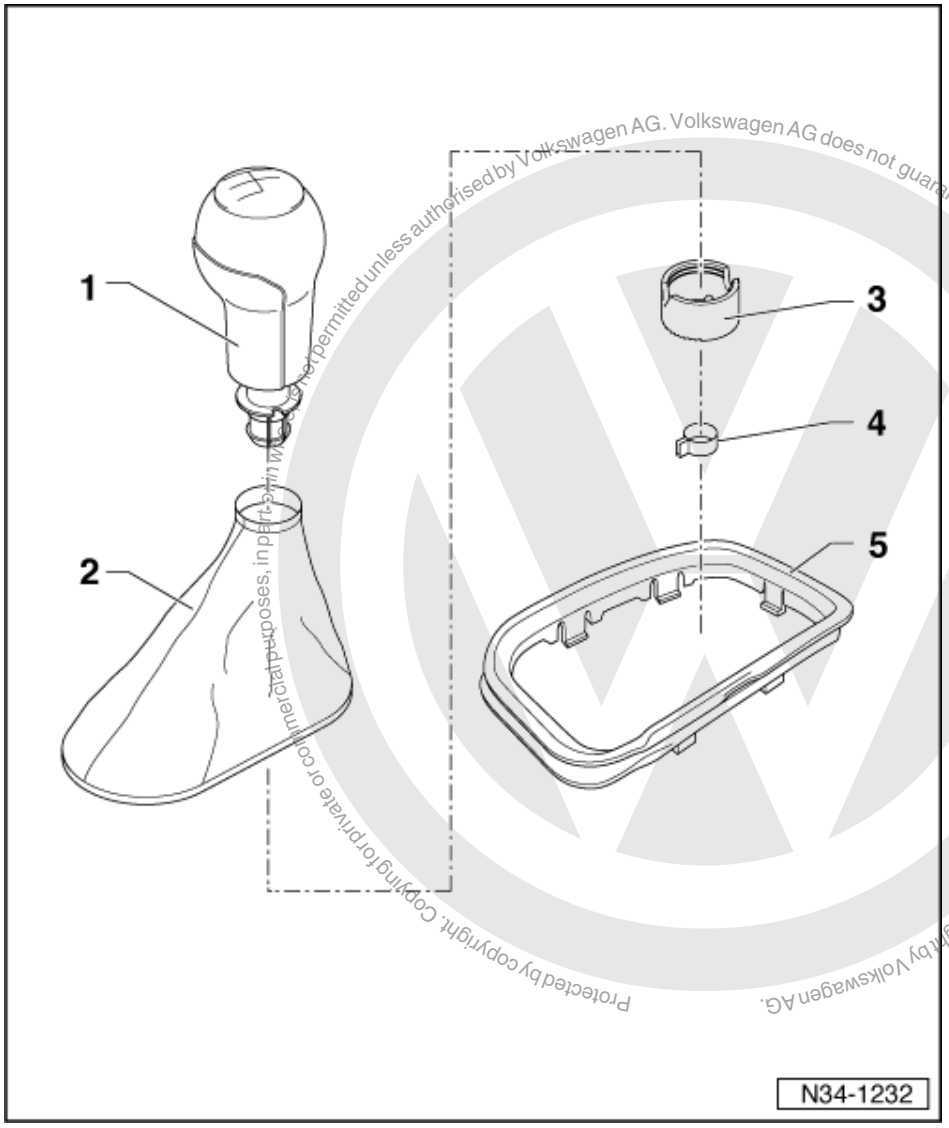

Protected by copyright. Copying for private or commercial purposes, in part or in whole, is not permitted unless authorised by Volkswagen AG. Volkswagen AG does not guarantee or accept any liability with respect to the correctness of information in this document. Copyright by Volkswagen AG.

satelettronica

1 Gear stick knob
- Screw on and off together with gaiter

2 Cover
- Separating from gear stick knob => Fig. 1
- Connect to gear stick knob before installing Fig. 1
- Remove and install together with gear stick knob

3 Sleeve

4 Clamp
- To secure gear stick knob on gear stick
- Secure on gear stick knob -item 1 - using pliers V.A.G 1275

5 Frame

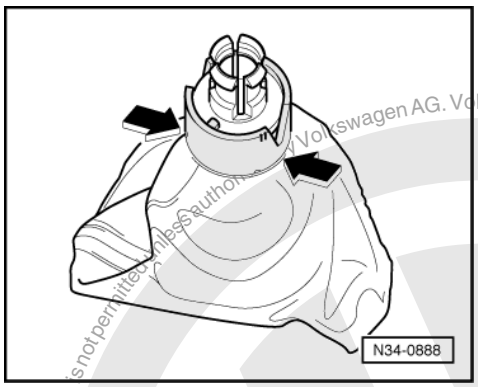

-> Fig.1 Separating cover from gear stick knob and assembling to gear stick knob

- Turn cover inside out.
- Carefully lever clamping sleeve (arrow) off with a screwdriver and pull the gear stick knob out.

Installation is carried out in the reverse sequence, when doing this note the following:

- Insert gear stick knob in cover.
- Push clamping sleeve onto gear stick knob and engage.
- Install gear stick knob and gaiter together.

1.4 - Assembly overview - Gearstick housing/gearstick

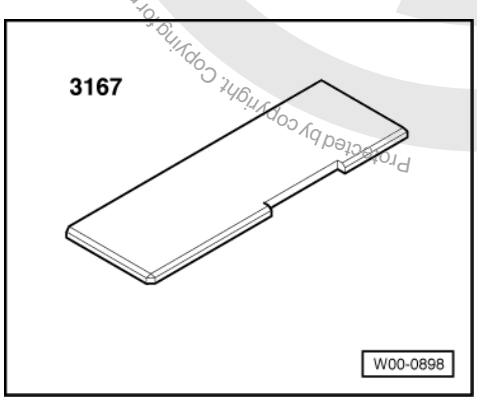

Special tools and workshop equipment required

- 3167 Gauge

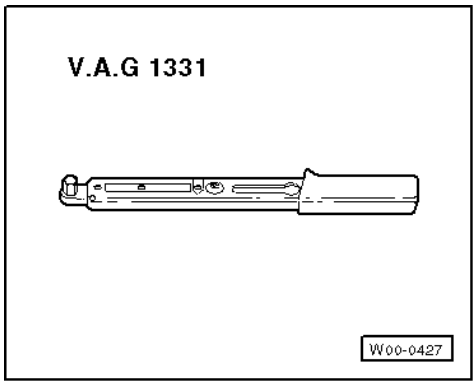

- V.A.G 1331 Torque wrench

Volkswagen AG. Volkswagen AG does not guarantee or accept any liability with respect to the correctness of information in this document. Copyright by Volkswagen AG.
Protected by copyright. Copying for private or commercial purposes, in part or in whole, is not permitted unless authorised by Volkswagen AG.
satelettronica

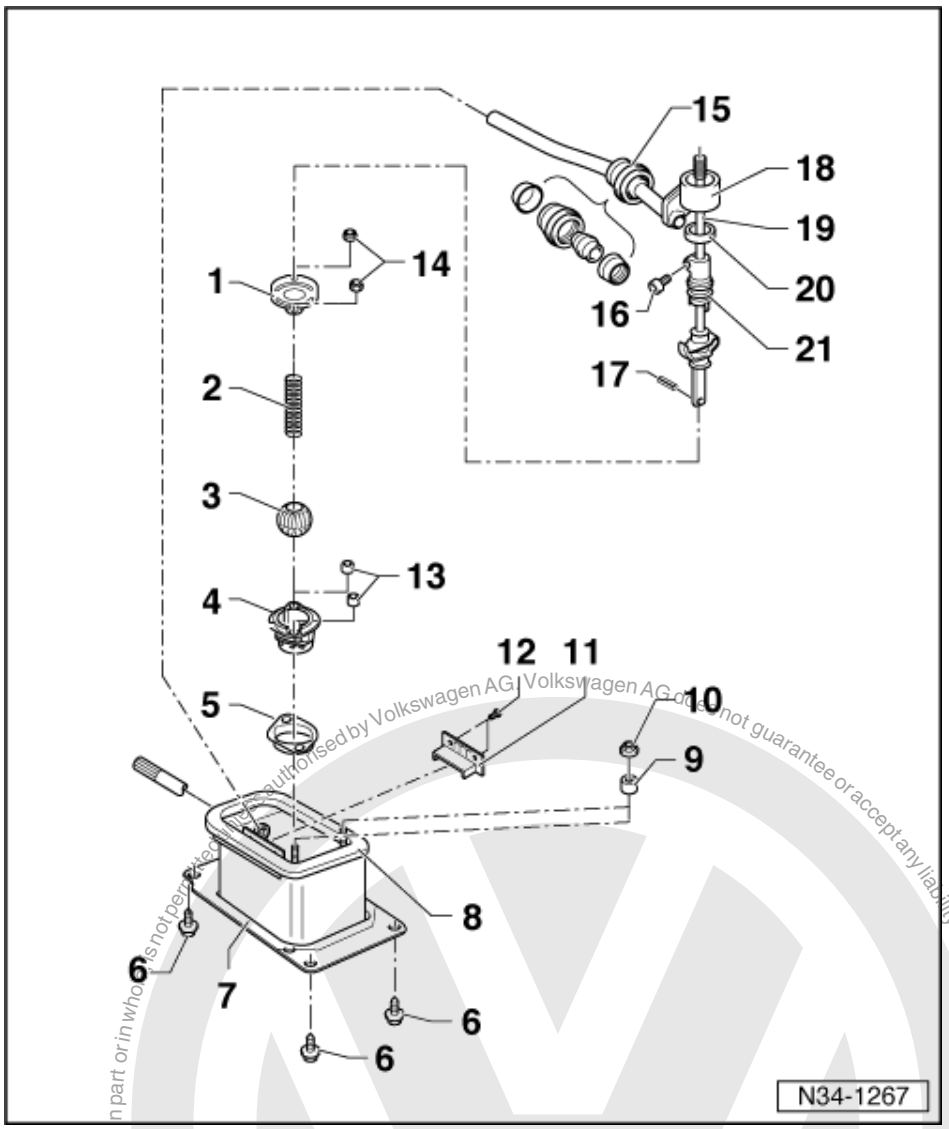

Note:

Lubricate all mountings and sliding surfaces with Polyurea grease Part No. G 052 142 A2.

1 Retaining plate
- Installation position => Fig. 1

2 Spring

3 Ball

4 Ball housing

5 Gasket
- For ball housing

6 Hexagon bolt, 20 Nm
- Gear stick housing to body

7 Selector housing
- Removing and installing
  => from Page 45

8 Gasket
- Bond to gear stick housing

Protected by copyright. Copying for private or commercial purposes, in part or in whole, is not permitted unless authorised by Volkswagen AG. Volkswagen AG does not guarantee or accept any liability with respect to the correctness of information in this document. Copyright by Volkswagen AG.
satelettronica

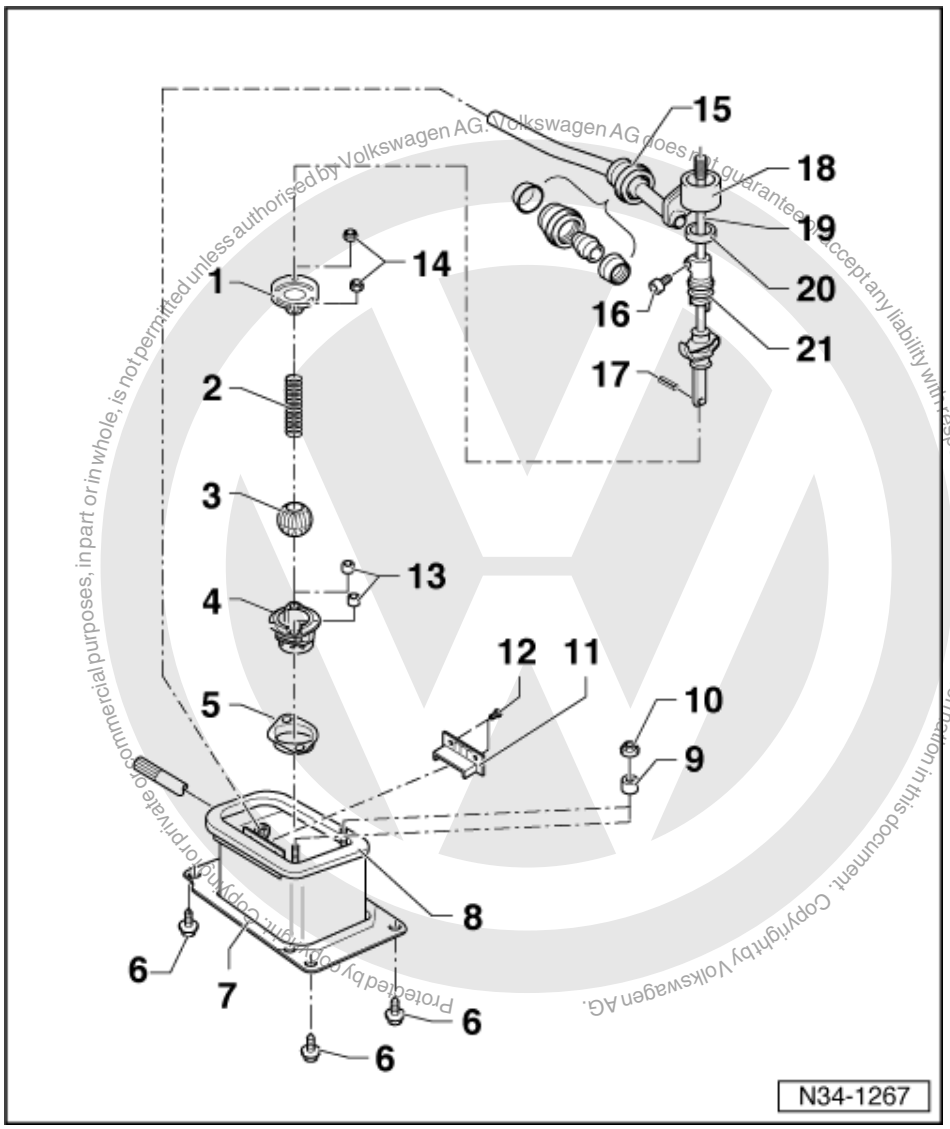

Protected by copyright. Copyright by Volkswagen AG.
Copyright by Volkswagen AG. Volkswagen AG does not guarantee or accept any liability with respect to the correctness of information in this document. Copying for private or commercial purposes, in part or in whole, is not permitted unless authorised by Volkswagen AG.

9 Spacer sleeve
- Between console and gear stick housing

10 Plastic nut
- For console on gear stick housing
- Unscrew before removing gearstick housing

11 Stop

12 Rivet
- To secure stop

13 Spacer sleeve

14 Self-locking hexagon nut, 10 Nm
- Always renew

15 Selector rod bearing
- When installing ensure that both plastic half cups are not pressed apart

satelettronica

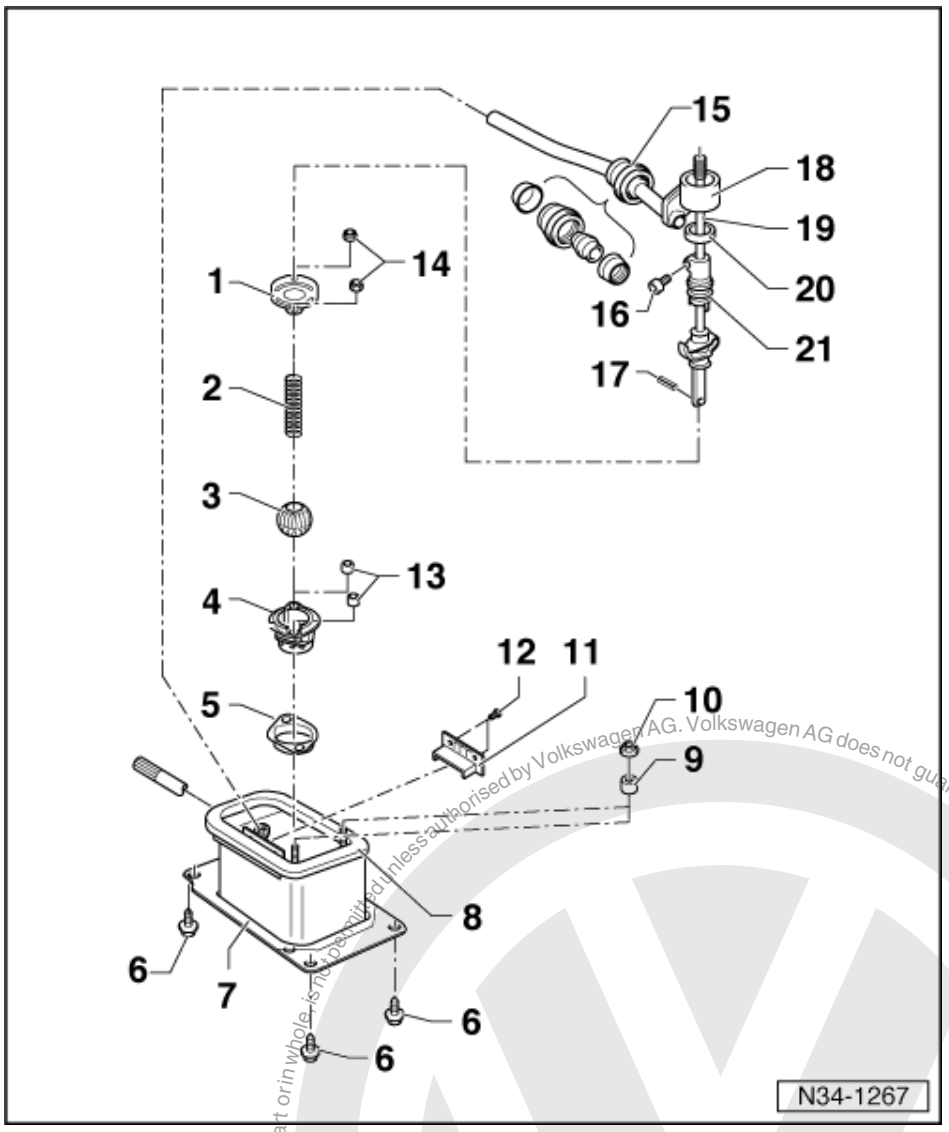

16 Bolt, 2 Nm

17 Spring pin

- Removing and installing =>Fig. 4

18 Selector rod

- Pull with gear stick out of gear stick housing => Fig. 3
- After installing, adjust gear selector mechanism => Page 47

19 Gearbox selector lever

- Before removing, remove eccentric adjuster => Fig. 2
- Assemble before installing:
  Push on retaining plate (item 1), spring (item 2) and ball (item 3) and secure with spring pin (item 17) =>Fig. 4

20 Synthetic ring

- Fit to eccentric adjuster

21 Eccentric adjuster

- Engage in gear stick after installing gear stick
- Removing => Fig. 2

satelettronica
Protected by copyright. Copying for private or commercial purposes, in part or in whole, is not permitted unless authorised by Volkswagen AG. Volkswagen AG does not guarantee or accept any liability with respect to the correctness of information in this document. Copyright by Volkswagen AG.

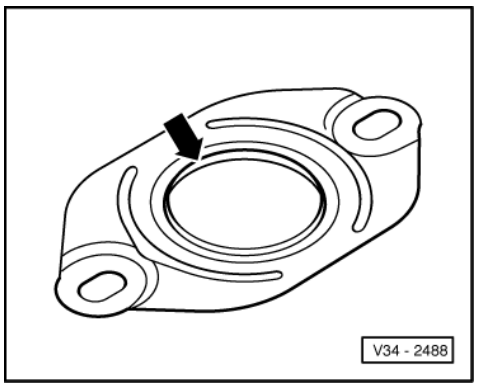

-> Fig.1 Retaining plate installation position

The circumferential shoulder (arrow) is located opposite ball (item 37 .

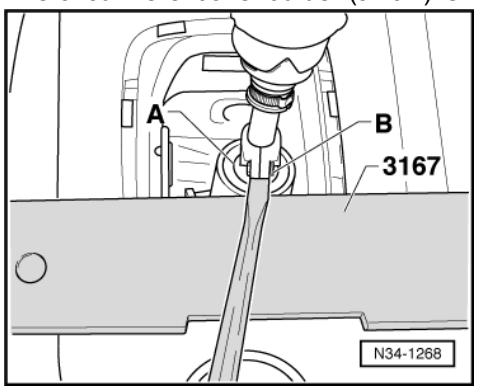

-> Fig.2 Removing eccentric adjuster

- Loosen bolt -B- and lever eccentric adjuster -A- carefully off lower part.

  Use e.g. special tool 3167 as a support.

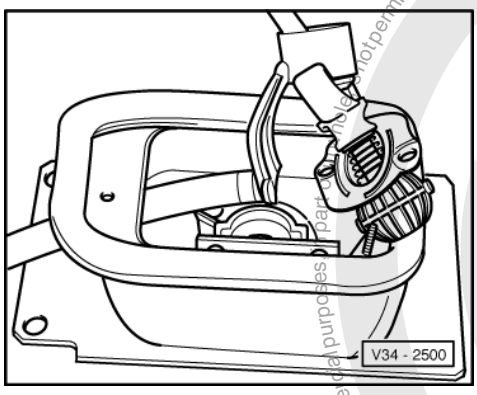

-> Fig.3 Pulling gear selector rod with gear stick lever out from gear stick housing

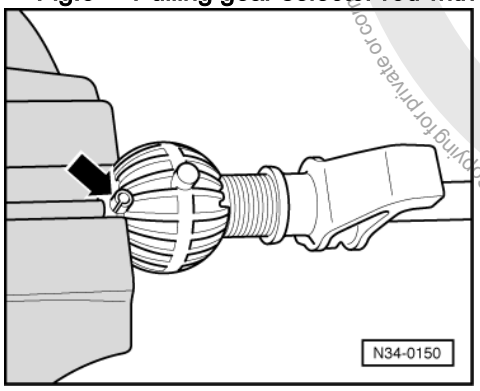

Protected by copyright. Copying for private or commercial purposes, in part or in whole, is not permitted unless authorised by Volkswagen AG. Volkswagen AG does not guarantee or accept any liability with respect to the correctness of information in this document. Copyright by Volkswagen AG.
satelettronica

-> Fig.4 Removing and installing spring pin

- Tension gear stick in a vice as shown.
- Drive spring pin (arrow) in and out with drift.

1.5 - Assembly overview - gear selector relay points at gearbox

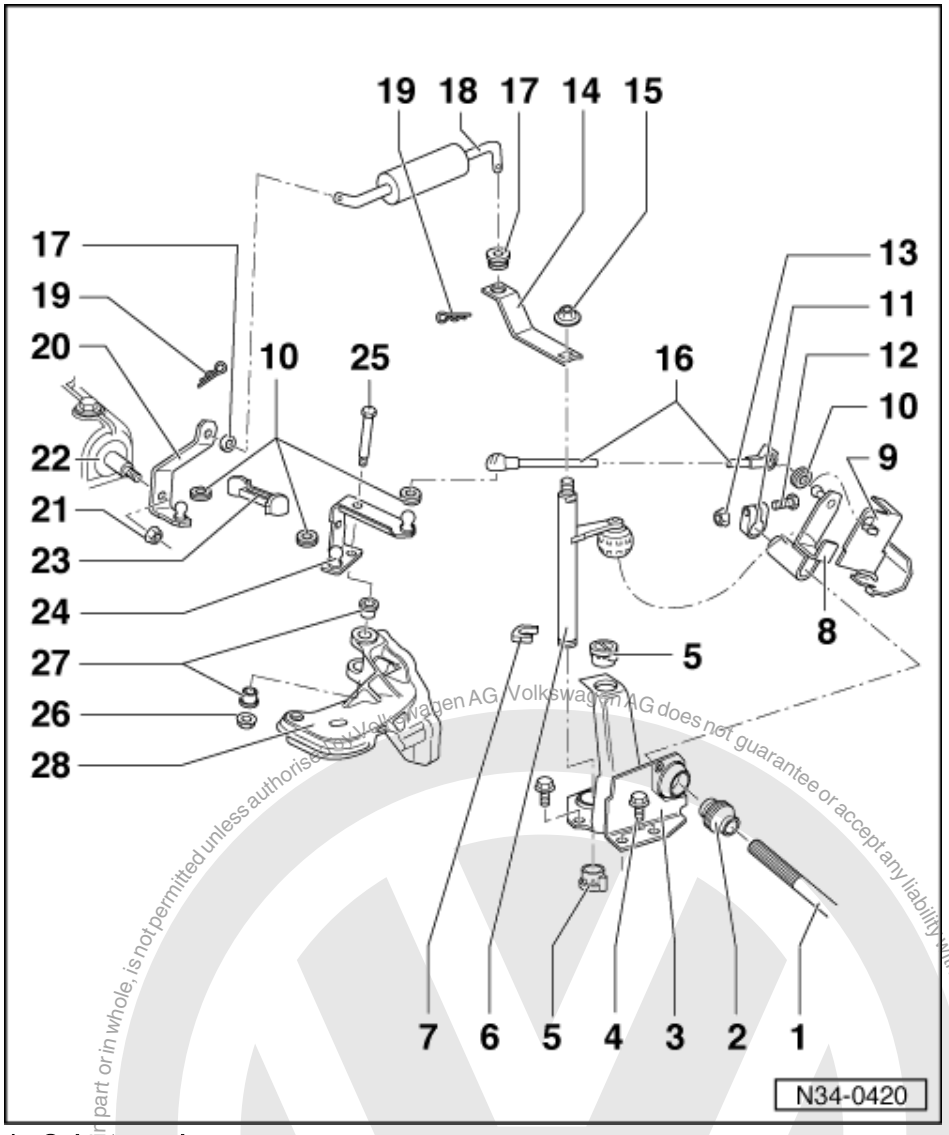

1 Selector rod
- Pull out from gear stick housing => Fig. 1

2 Mounting bush

3 Mounting bracket
- For relay shaft and selector rod mounting

4 Hexagon bolt, 25 Nm
- Mounting bracket to steering box
- Qty. 3

5 Mounting bush

6 Relay shaft

7 Circlip

8 Gate lever

Protected by copyright. Copying for private or commercial purposes, in part or in whole, is not permitted unless authorised by Volkswagen AG. Volkswagen AG does not guarantee or accept any liability with respect to the correctness of information in this document. Copyright by Volkswagen AG.

satelettronica

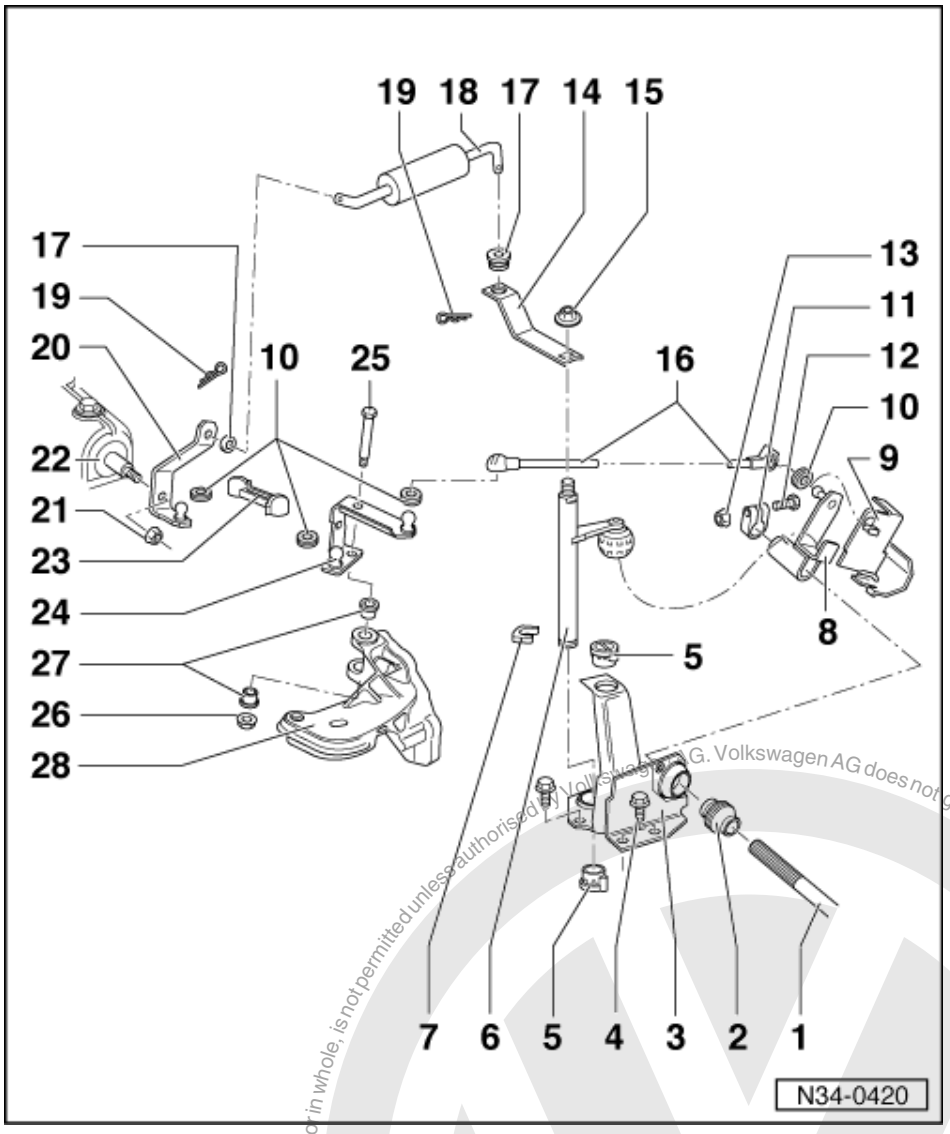

9 Heat shield
- Installation position => Fig. 2

10 Oil seal

11 Clamp

12 Bolt
- Clamp to selector rod

13 Self-locking hexagon collared nut, 20 Nm
- Clamp to selector rod

14 Intermediate lever

15 Self-locking hexagon nut, 20 Nm
- Intermediate lever to relay shaft

Protected by copyright. Copying for private or commercial purposes, in part or in whole, is not permitted unless authorised by Volkswagen AG. Volkswagen AG does not guarantee or accept any liability with respect to the correctness of information in this document. Copyright by Volkswagen AG.

satelettronica

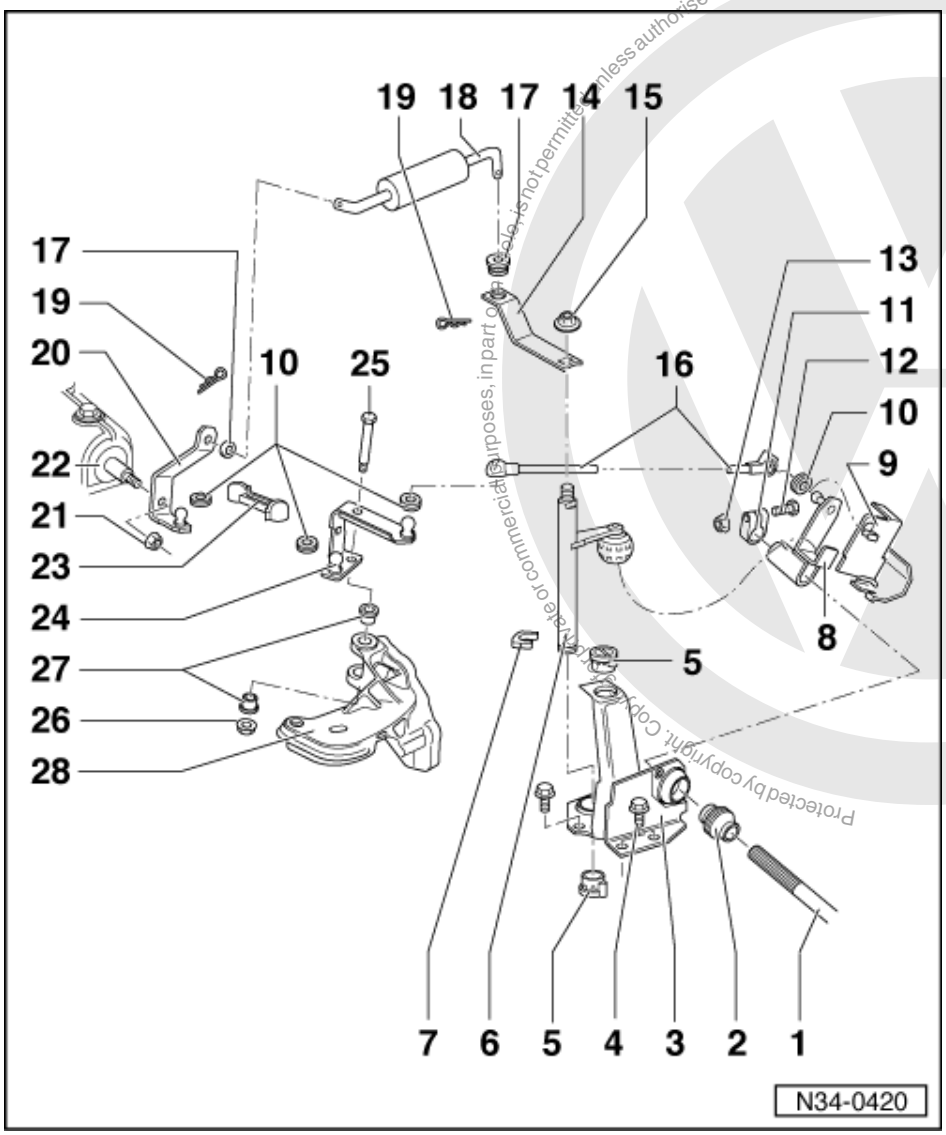

16 Gate selector rod, long
- Before removing, press synthetic head clamping piece back with a screwdriver

17 Mounting bush
18 Gear selector rod, front
19 Securing spring
20 Gearbox selector lever
- Fits onto selector shaft in one position only.

21 Self-locking hexagon nut, 25 Nm
- Selector lever to gearbox

22 Selector shaft
23 Gate selector rod, short

satelettronica

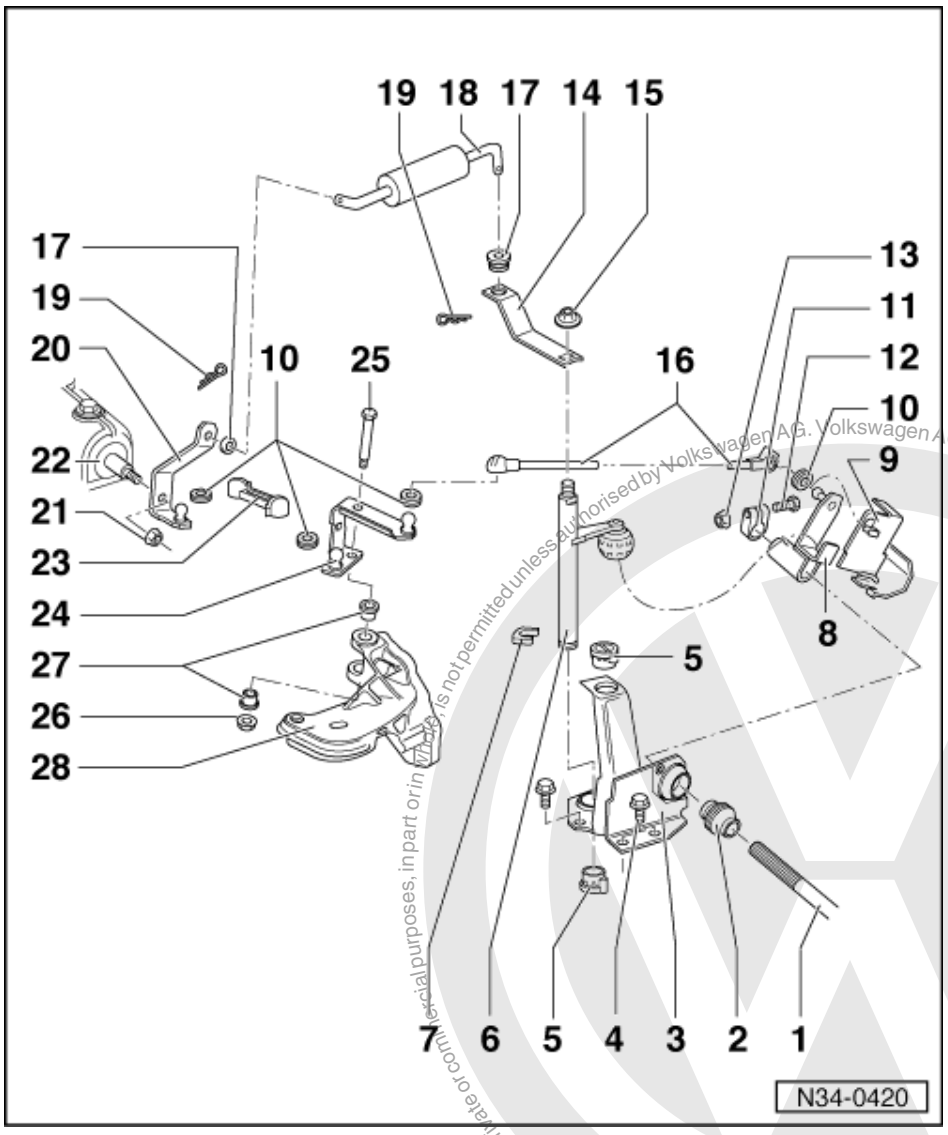

24 Relay lever
25 Hexagon bolt
- Relay lever to console

26 Self-locking hexagon nut, 15 Nm
- Relay lever to console

27 Mounting bush
28 Gearbox console
- Need not be removed when removing relay lever

Protected by copyright. Copying for private or commercial purposes, in part or in whole, is not permitted unless authorised by Volkswagen AG. Volkswagen AG does not guarantee or accept any liability with respect to the correctness of information in this document. Copyright by Volkswagen AG.
satelettronica

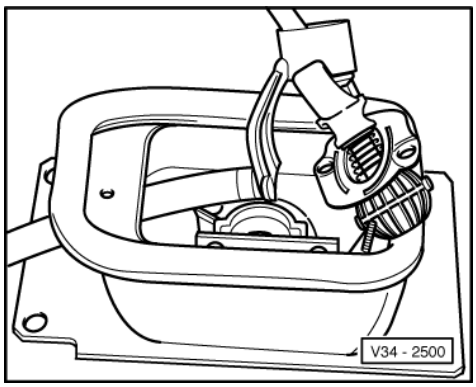

-> Fig.1 Pulling gear selector rod with gear stick lever out from gear stick housing

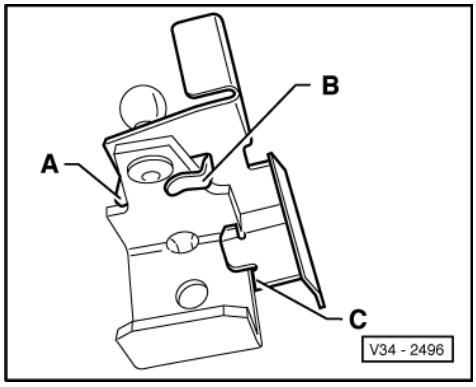

-> Fig.2 Heat shield installation position

The clips -A- and -B- encompass the gate selector lever.

Area -C- then lies on gate selector lever.

1.6 - Removing and installing gear stick lever/selector rod

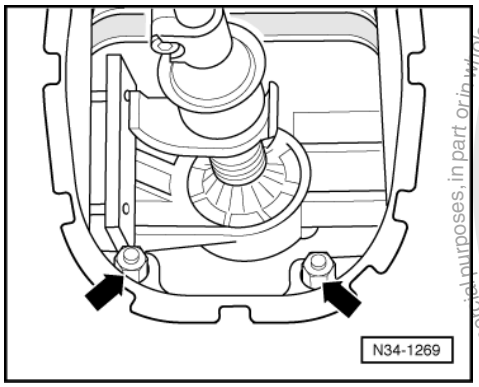

Removing

- Pull the gear stick cover off the centre console.
- -> Remove nuts -arrows- for console.
- Remove insulation tray below engine/gearbox, if fitted.

Protected by copyright. Copying for private or commercial purposes, in part or in whole, is not permitted unless authorised by Volkswagen AG. Volkswagen AG does not guarantee or accept any liability with respect to the correctness of information in this document. Copyright by Volkswagen AG.
satelettronica

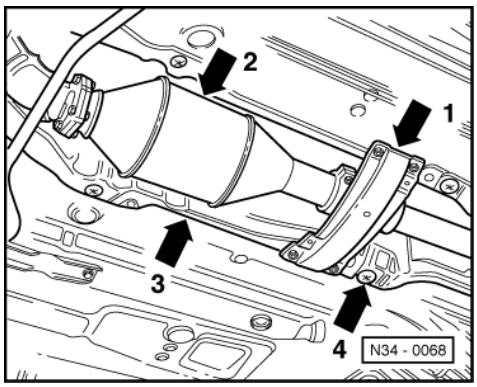

- -> Remove front cross support (arrow 1), below exhaust system.
- If fitted remove Lambda probe from catalyst (arrow 2) or from front exhaust pipe.

=> Repair group 26; Removing and installing parts of the exhaust system. Removing and installing parts of the exhaust system.

- Remove catalyst (arrow 2)/front exhaust pipe and front heat shield (arrow 3).

=> Repair group 26; Removing and installing parts of the exhaust system. Removing and installing parts of the exhaust system.

- Loosen rear heat shield (arrow 4) in forward area.

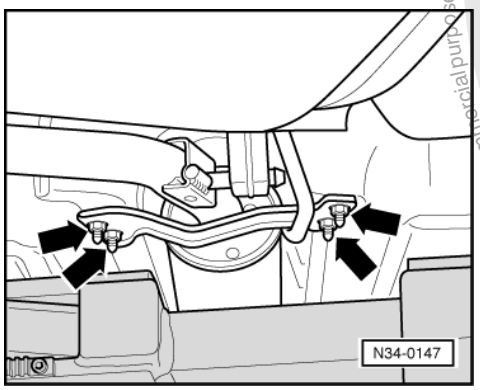

- -> Remove rear cross member (arrows).
- Detach exhaust system from mounting and support.
- Remove rear heat shield.

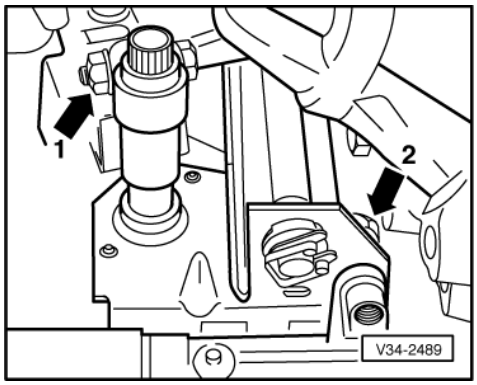

- -> Remove securing bolt (arrow 1) for selector rod/gate lever clamp and forward mounting bracket securing bolt (arrow 2) on steering box.

Protected by copyright. Copying for private or commercial purposes, part or whole is not permitted unless authorised by Volkswagen AG. Volkswagen AG does not guarantee or accept any liability with respect to the correctness of information in this document. Copyright by Volkswagen AG.
satelettronica

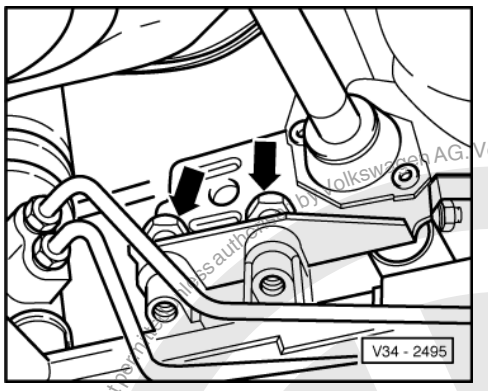

- -> Unbolt mounting bracket from steering (arrows).
- Unbolt selector housing from body.
- Push gear stick housing to rear, push selector rod with mounting bracket and gate lever up into engine compartment and pull mounting bracket together with gate lever off selector rod.

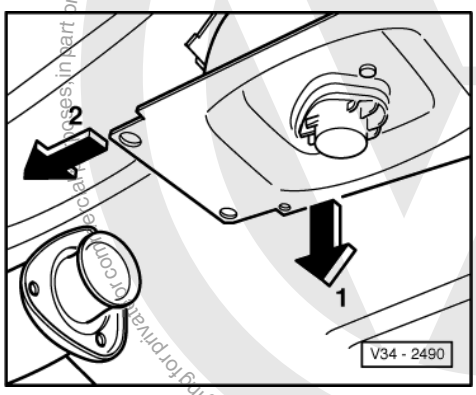

- -> Swing gear stick housing with selector rod down (arrow 1), when doing this push towards engine (arrow 2) and remove.

Installing

Install in reverse order.

Adjusting selector mechanism => Page 47 .

Tightening torques

Gear stick housing to body	20 Nm
Cross support to body	15 Nm
Clamp for selector rod	25 Nm

1.7 - Adjusting gear selector mechanism

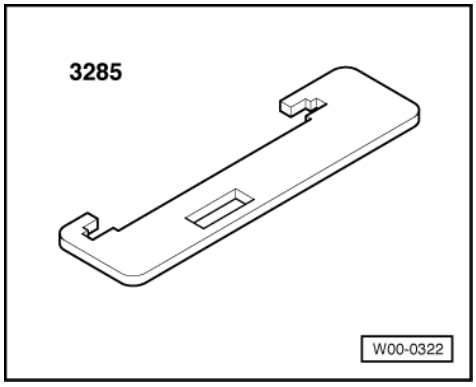

Protected by copyright. Copying for private or commercial purposes, in part or in whole, is not permitted unless authorised by Volkswagen AG. Volkswagen AG does not guarantee or accept any liability with respect to the correctness of information in this document. Copyright by Volkswagen AG.
satelettronica

Special tools and workshop equipment required

- 3421 Gear lever jig

Notes:

The following points are essential to ensure correct selector adjustment:

- Moving parts of selector mechanism and transmission elements must be in proper condition.
- Selector mechanism must move freely.

The gearbox, clutch and clutch mechanism must also be in proper condition.

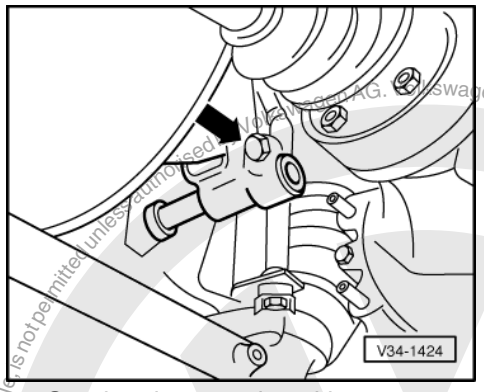

- Gearbox in neutral position.

- -> Loosen clamp (arrow). The joint selector rod/selector lever must be free to move.
- Pull the gear stick cover off the centre console.

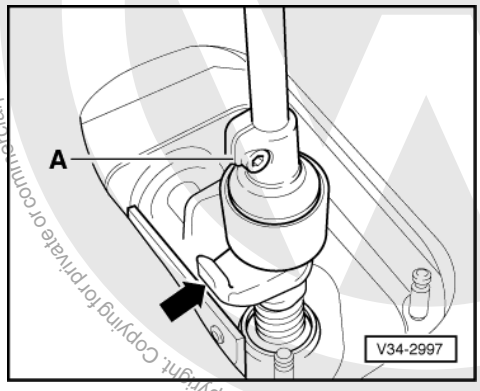

- -> The eccentric adjuster on gear stick must be so aligned that the clamp -A- faces to reverse gear hook (arrow).

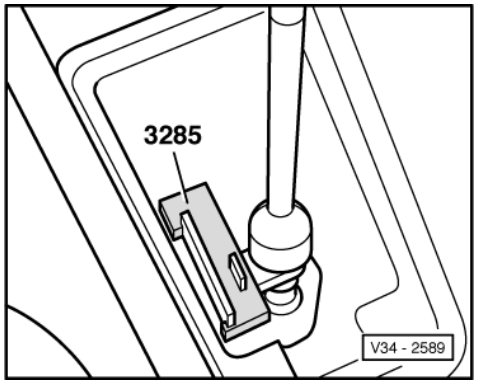

- -> Insert gear stick jig.
- Jig must not stick.

Protected by copyright. Copying for private or commercial purposes, in part or in whole, is not permitted unless authorised by Volkswagen AG. Volkswagen AG does not guarantee or accept any liability with respect to the correctness of information in this document. Copyright by Volkswagen AG.
satelettronica

- Align selector rod and gate lever free of stress.

Note:

- Please ensure that the gearbox is not in gear (neutral position).

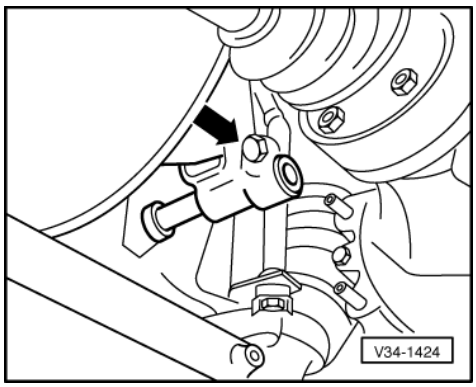

- -> Tighten clamp -arrow- and remove gearstick jig.

Functional check

- The gearstick must rest in the 3rd/4th gear plane with gearbox in neutral.

- Select all gears several times. Pay particular attention to the operation of the reverse gear lock.

Should a gear fail to engage smoothly after repeated selection, then continue as follows:

- Engage 1st gear.

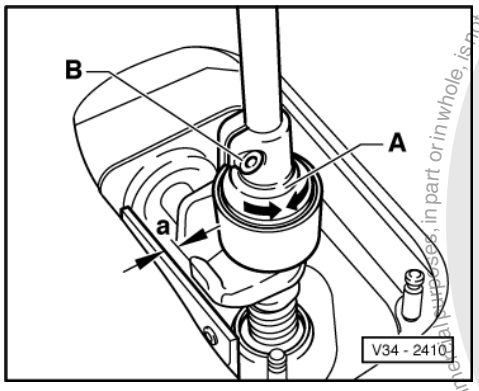

- Remove play from selector mechanism by carefully pushing gear stick to the left.

- -> Distance -a- must then be 0.5 mm to 1.5 mm.

- Should this not be the case, carry out fine adjustment with 1st gear selected =>Page 50 .

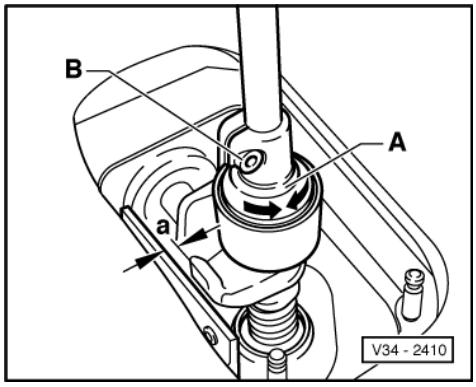

satelettronica
Protected by copyright. Copyright by Volkswagen AG.
Copyright by Volkswagen AG. Volkswagen AG does not guarantee or accept any liability with respect to the correctness of information in this document.
Copying for private or commercial purposes, in part or in whole, is not permitted unless authorised by Volkswagen AG.

Fine adjustment

- 1st gear selected.

- -> Loosen clamp bolt -B-.
- Set to dimension -a- by turning the adjustment eccentric -A-.
- Tighten clamp bolt -B-.
- Clip cover into frame.

Tightening torque

Eccentric adjustment clamping bolt	2 Nm
Clamp for selector rod	25 Nm

2 - Removing and installing gearbox

2.1 - Removing and installing gearbox

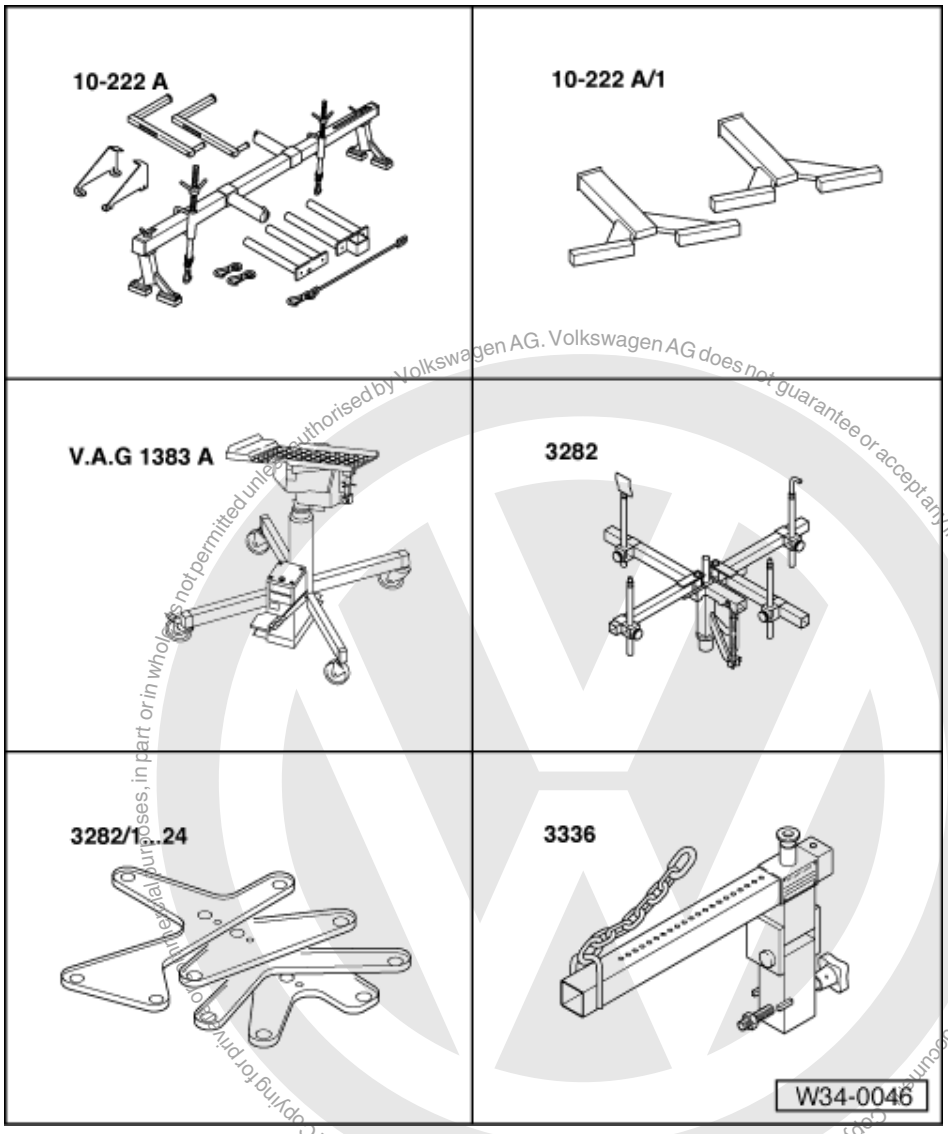

Special tools and workshop equipment required

satelettronica
Protected by copyright. Copying for private and commercial purposes, in part or in whole, is not permitted unless authorised by Volkswagen AG. Volkswagen AG does not guarantee or accept any liability with respect to the correctness of information in this document. Copyright by Volkswagen AG.

- 10-222 A Support
- 10-222 A/1 Support
- V.A.G 1383 A Gearbox jack
- 3282 Gearbox support
- 3282/5 Adjustment plate
- 3282/40 Pins (Qty. 2)
- 3282/59 Support
- 3336 Gearbox lifting beam

Special tools and workshop equipment required

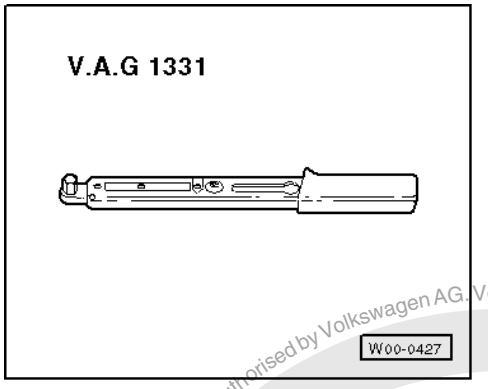

- V.A.G 1331 Torque wrench

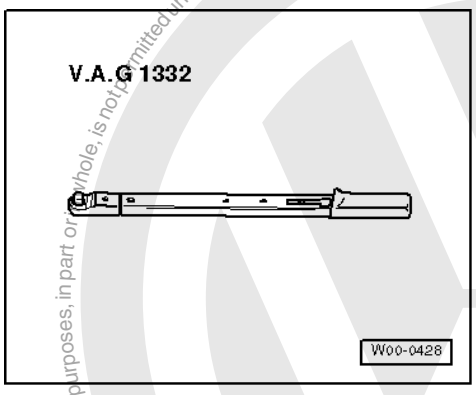

- V.A.G 1332 Torque wrench

Removing

- Remove cover from engine.
- First check whether a coded radio is fitted. If this is the case obtain the anti-theft coding.

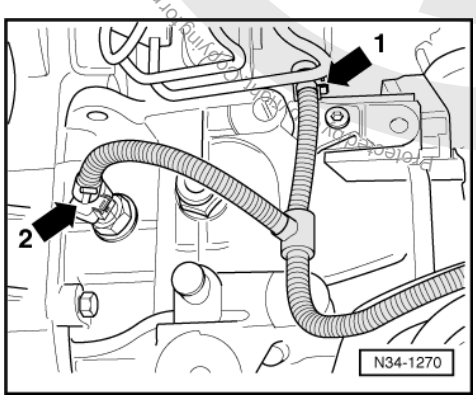

- With the ignition switched off disconnect the battery earth strap.
- Then remove air cleaner if fitted on left-hand side of engine compartment

Protected by copyright. Copying for private or commercial purposes, in part or whole, is not permitted unless authorised by Volkswagen AG. Volkswagen AG does not guarantee or accept any liability with respect to the correctness of information in this document. Copyright by Volkswagen AG.
satelettronica

=> Repair group 24; Servicing injection system Servicing injection system

- -> Pull connector off road speed sender (arrow 1).

- Pull off reverse light connector (arrow 2). Disconnect all other electrical connections and earth wires from gearbox and from the engine/gearbox securing bolts.
- Remove engine/gearbox upper securing bolts.

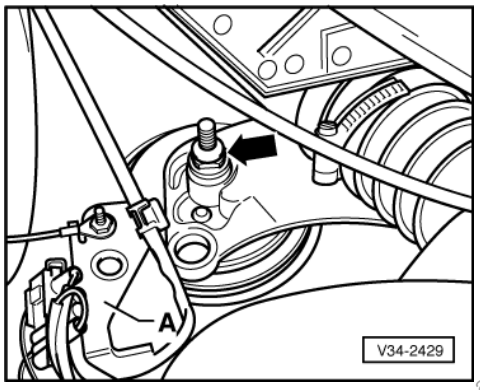

- -> Remove bolt (arrow) on engine console/sub-frame, right. If fitted remove connector mounting plate -A-.

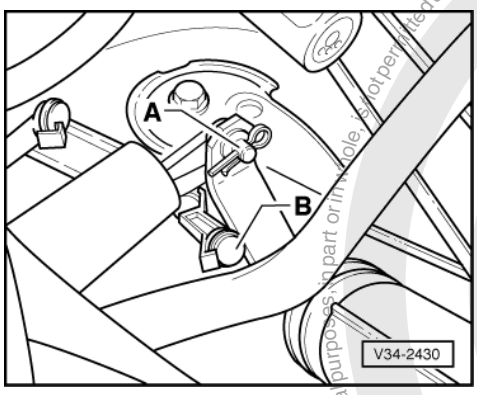

- -> Disconnect front gear selector rod -A- and short gate selector rod -B- at selector shaft lever.

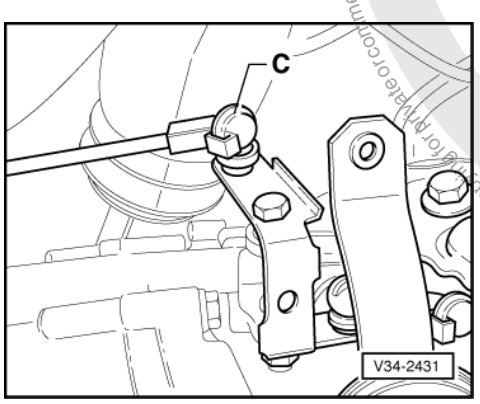

- -> Unhook longer gate selector rod -C- at relay lever, but first open clip.

Protected by copyright. Copying for private or commercial purposes, in part or in whole, is not permitted unless authorised by Volkswagen AG. Volkswagen AG does not guarantee or accept any liability with respect to the correctness of information in this document. Copyright by Volkswagen AG.
satelettronica

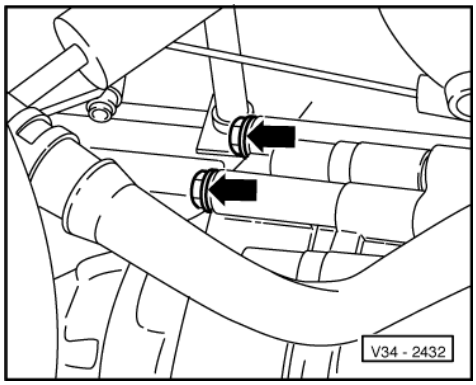

- -> Unbolt the two upper left gearbox console bolts (arrows) from gearbox.

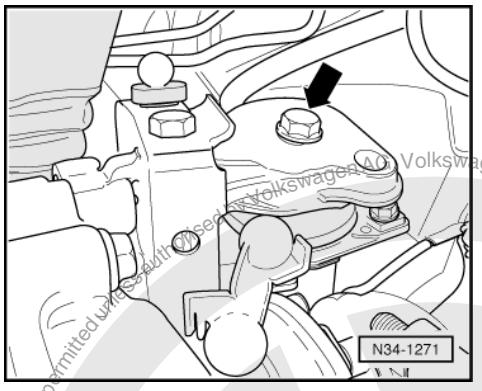

- -> Unbolt hexagon bolt (arrow) on left gearbox assembly mounting.

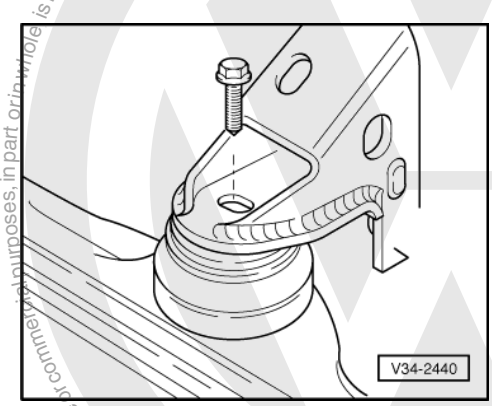

- -> Unbolt front console securing bolt on engine mounting.

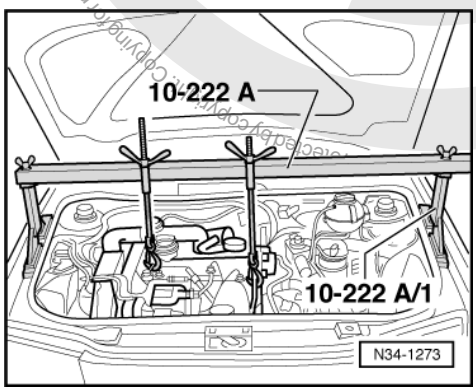

- -> Fit support bar 10-222 A with legs 10-222 A/1 and support engine/gearbox in this position.

Copyright by Volkswagen AG. Volkswagen AG does not guarantee or accept any liability with respect to the correctness of information in this document. Copying for private or commercial purposes, in part or in whole is not permitted unless authorised by Volkswagen AG.
satelettronica

Note:

Before fitting the support hooks of the support bar, remove hose and wire connections from engine in the area of the lifting eyes, so that they are not damaged.

- Take weight of engine/gearbox assembly on the spindles.
- Remove insulation tray below engine/gearbox, if fitted.

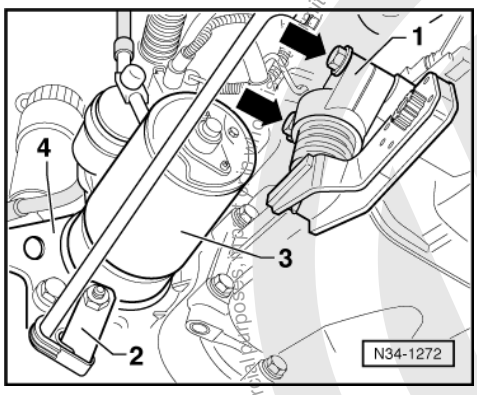

- -> Remove slave cylinder -1- -arrows-, place to side and secure with wire, do not disconnect pipes.

Note:

Do not depress clutch pedal.

- Remove power assisted steering pipe bracket -2- from starter -3-.
- Remove starter.

=> Electrical system; Repair group 27; Starter motor; Removing and installing starter motor Starter motor Removing and installing starter motor

- Remove front console -4-.

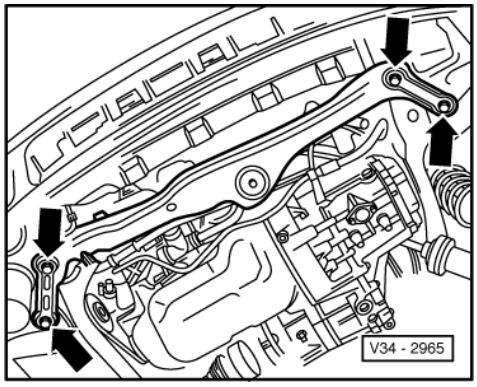

- Remove the bracket for the power-assisted steering pipe from engine carrier.
- -> Remove engine carrier (arrows).
- Remove large cover plate for clutch, if fitted.

Protected by copyright. Copying for private or commercial purposes, in part or in whole, is not permitted unless authorised by Volkswagen AG. Volkswagen AG doesn't guarantee or accept any liability with respect to the correctness of information in this document. Copyright by Volkswagen AG.
satelettronica

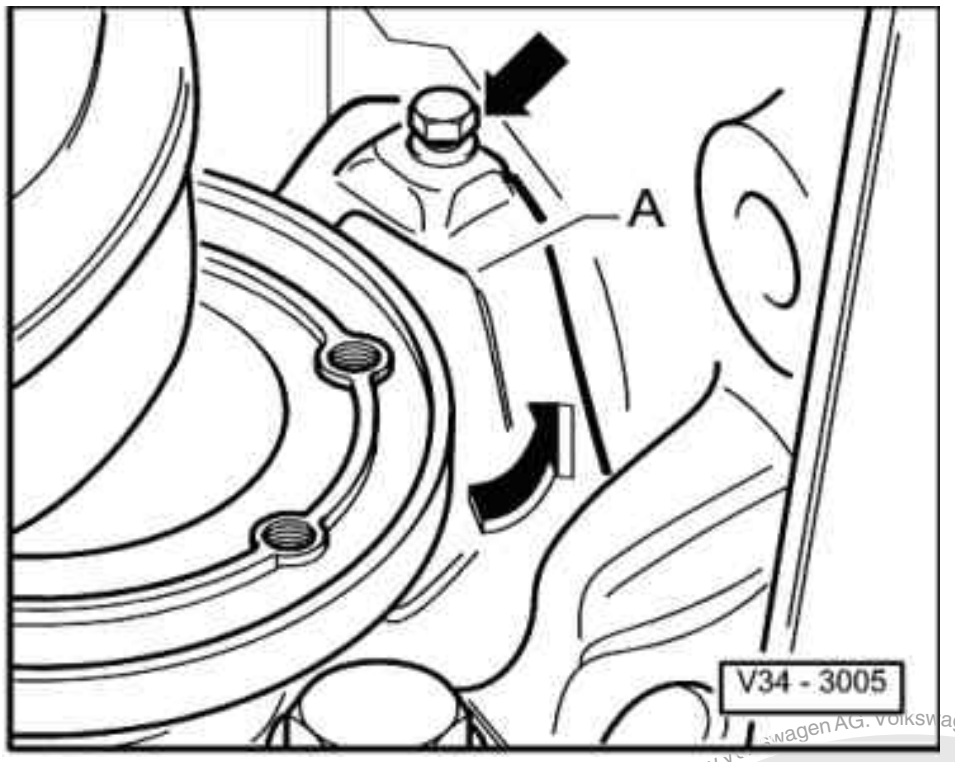

- -> Remove flywheel small cover plate -A- behind the right-hand flanged shaft (arrows), if fitted.
- Separate exhaust system after front exhaust pipe at double clamp, exhaust system retainer (if part of original equipment) and subframe

=> Repair group 26; Removing and installing parts of exhaust system. Removing and installing parts of exhaust system.

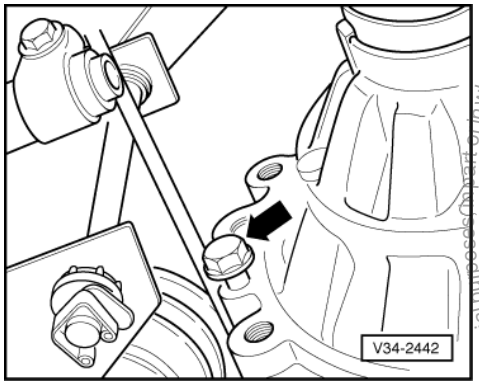

- -> Remove third bolt (arrow) for left gearbox console and take gearbox console out.
- Remove right hand inner constant velocity joint protective cover from engine if fitted.
- Disconnect drive shafts from flanged shafts and tie up as high as possible, when doing this do not damage surface protection.

Protected by copyright. Copying for private or commercial purposes, in part or in whole, is not permitted unless authorised. Volkswagen AG does not guarantee or accept any liability with respect to the correctness of information in this document. Copyright by Volkswagen AG.
satelettronica

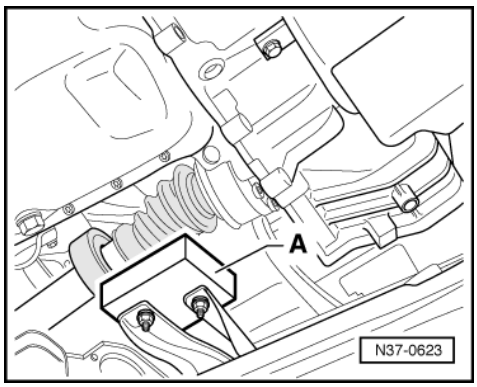

- -> Remove vibration damper -A- from sub-frame. Mark installation position.
- Incline the engine/gearbox assembly by lowering it via the left spindle of support bar 10-222A .
- Assemble gearbox jack with gearbox support 3282, adjustment plate 3282/5 for "020" gearbox and support elements as follows:
- Place adjustment plate 3282/5 on gearbox support 3282. (Adjustment plate only fits in one position).
- Align arms of gearbox support according to holes in adjustment plate.

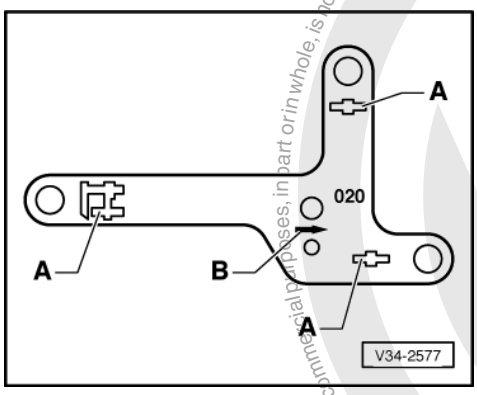

- -> Bolt on support elements -A-, as illustrated, on adjustment plate.

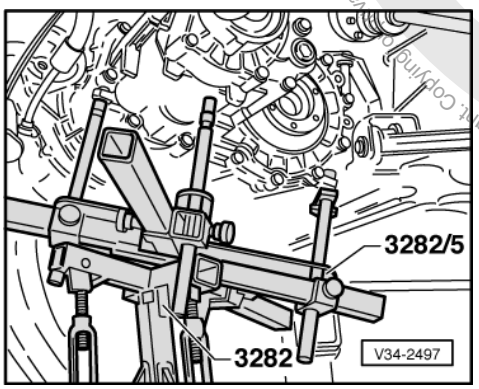

- -> Place gearbox jack under vehicle, arrow symbol -B- (=> Illustration V34-2577) on adjustment plate points to front of vehicle.
- Align adjustment plate parallel to gearbox and lock safety supports on gearbox.
- Remove lower engine/gearbox securing bolts.

Protected by copyright. Copyright by Volkswagen AG.
Copyright by Volkswagen AG. Volkswagen AG does not guarantee or assume any liability with respect to the correctness of information in this document.
Copying for private or commercial purposes, in part or in whole, is not permitted unless authorised by Volkswagen AG.
satelettronica

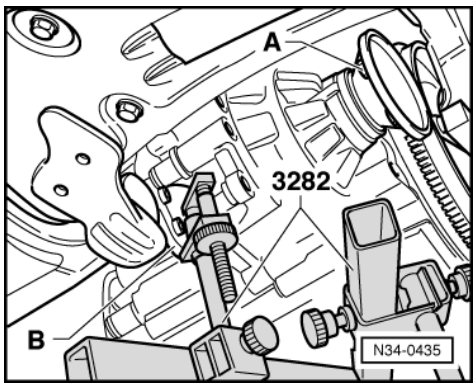

- -> Press gearbox off dowels and lower carefully, when doing this guide assembly on left -B- and right -A- flange shafts.

Note:

Do not damage P.A.S pipe when lowering gearbox.

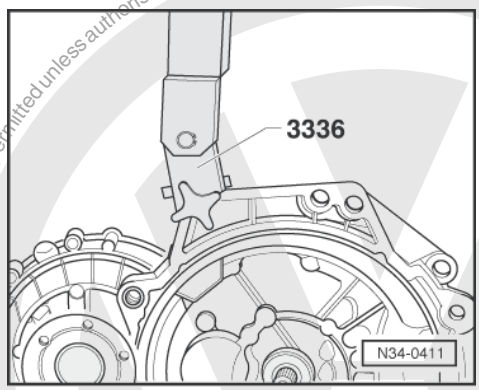

Transporting the gearbox

When transporting the gearbox and also when setting up gearbox support 3282, the gearbox lifting beam 3336 should be used.

- -> Bolt gearbox lifting device 3336 to clutch housing.

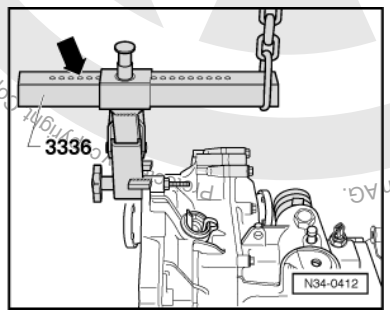

- -> Set support beam on sliding piece with locking pin (arrow).

No. of holes visible = 6

- Take gearbox out with workshop crane and gearbox lifting device 3336.

Installing

- Clean input shaft splines and lightly grease with G000 100 grease.

Copyright by Volkswagen AG. Volkswagen AG does not guarantee or accept any liability with respect to the correctness of information in this document. Copyright by Volkswagen AG. Copying for private or commercial purposes, in part or in whole, is not permitted unless authorised by Volkswagen AG.
satelettronica

The clutch plate must be able to slide lightly to and fro on the input shaft.

- Check whether dowel sleeves for aligning engine/gearbox are fitted in cylinder block, install if necessary.
- Ensure that the intermediate plate is correctly positioned on engine.
- Assemble gearbox jack with gearbox support 3282, adjustment plate 3282/5 for "020" gearbox and support elements as follows:

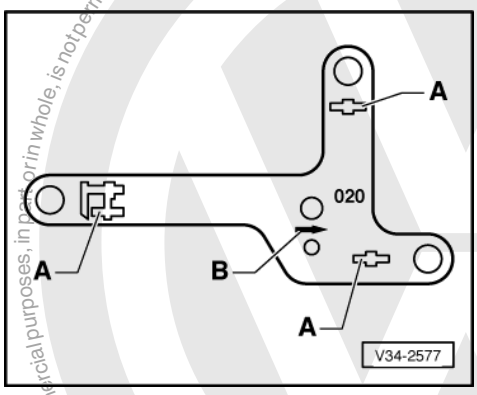

- Place adjustment plate 3282/5 on gearbox support 3282. (Adjustment plate only fits in one position).
- Align arms of gearbox support according to holes in adjustment plate.
- -> Bolt on support elements -A-, as illustrated, on adjustment plate.

- Place gearbox on gearbox jack.

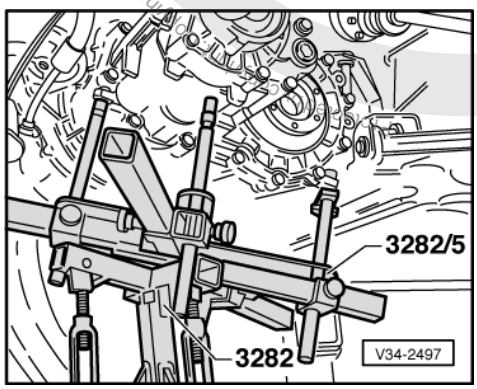

- Align adjustment plate and gearbox parallel with one another and lock safety supports on gearbox.
- -> Place gearbox jack under vehicle, arrow symbol -B- (=> Illustration V34-2577) on adjustment plate points to front of vehicle.
- Align adjustment plate parallel to gearbox and lock safety supports on gearbox.
- Insert gearbox.

Note:

Do not damage P.A.S pipe.

- Install lower engine/gearbox securing bolts.

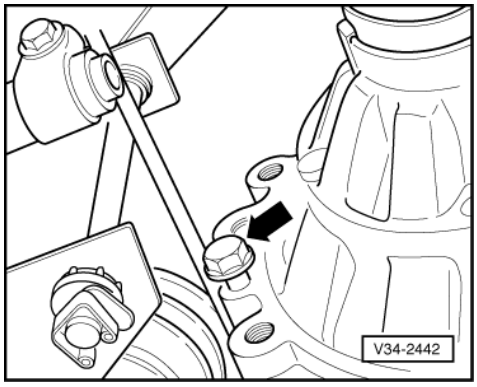

satelettronica

- Align engine/gearbox in installation position. To do this tighten the left-hand spindle on support bar 10-222 A.
- -> Attach left gearbox console with one bolt (arrow).

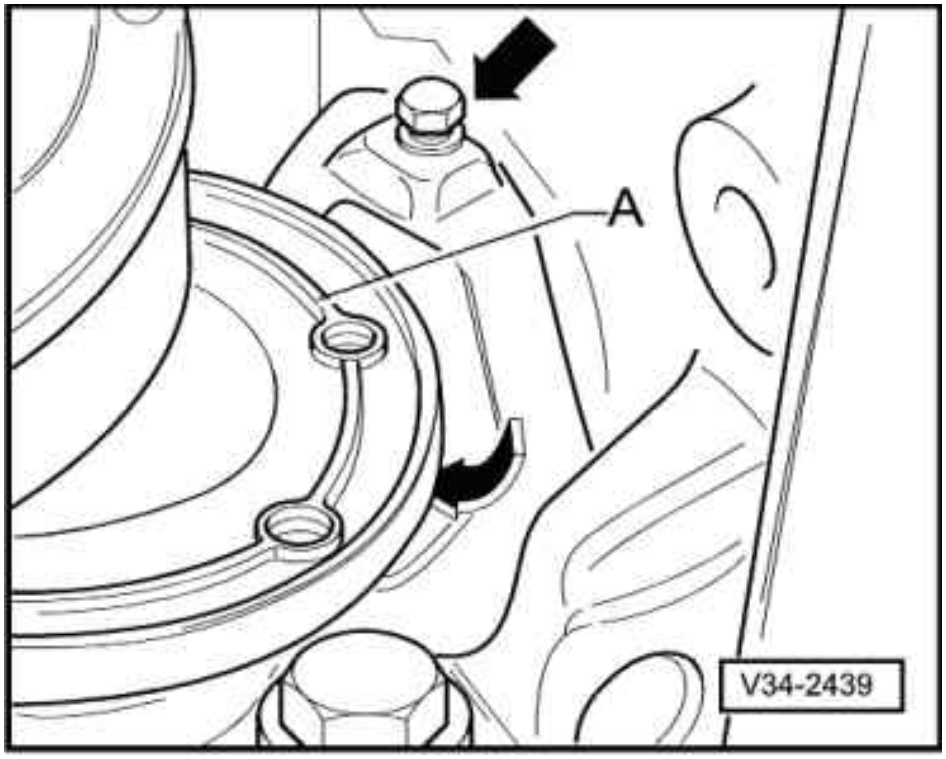

- -> If it was removed install small cover plate -A- behind right-hand drive flange (arrows).
- If it was removed install large cover plate for clutch.

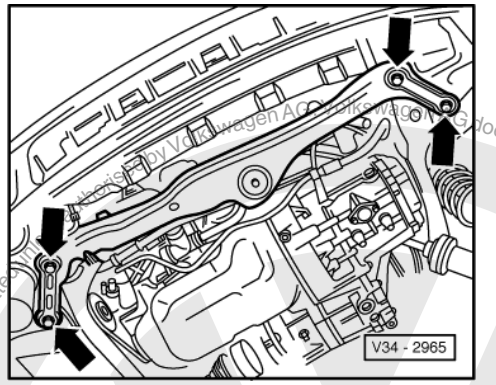

- -> Install engine carrier (arrows).
- Fit retainer for power-assisted steering pipe to engine carrier.

satelettronica
Protected by copyright. Copying for private or commercial purposes, in part or in whole, is not permitted. Licensed by Volkswagen AG. Volkswagen AG does not guarantee or accept any liability with respect to the correctness of information in this document. Copyright by Volkswagen AG.

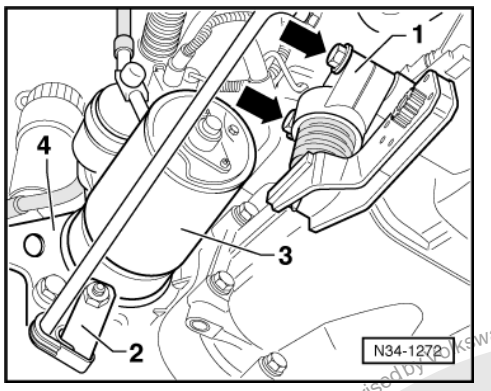

- -> Install front console -4-.
- Install starter -3-.

=> Electrical system; Repair group 27; Starter motor; Removing and installing starter motor Starter motor Removing and installing starter motor

- Install power assisted steering pipe bracket -2- on starter.
- Install slave cylinder -1- -arrows-.

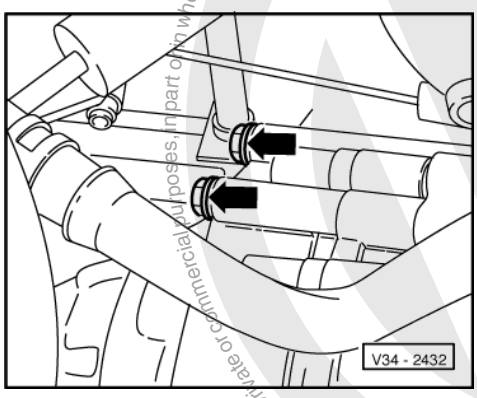

- -> Insert two upper bolts (arrows) for left gearbox console from gearbox and tighten.

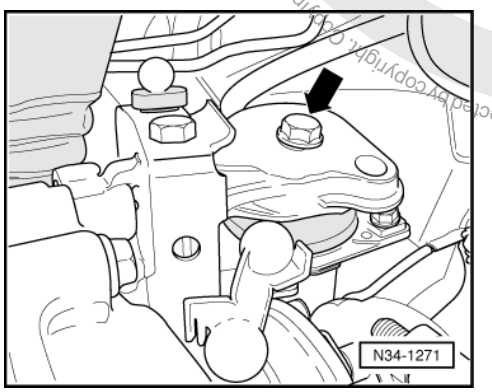

- -> Screw hexagon bolt (arrow) in left gearbox assembly mounting.

Protected by copyright. Copying for private or commercial purposes, in part or on wholesale not permitted unless authorised by Volkswagen AG. Volkswagen AG does not guarantee or accept any liability with respect to the correctness of information in this document. Copyright by Volkswagen AG.
satelettronica

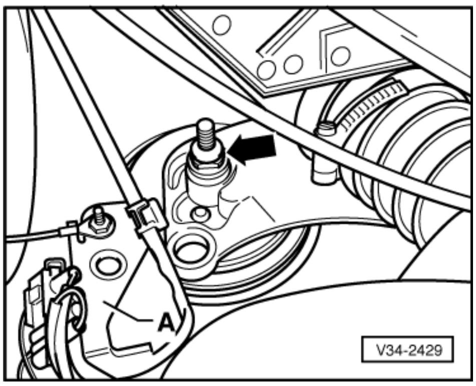

- -> Install bolt (arrow) on engine console/sub-frame, right. Fit connector mounting plate -A-, if fitted.

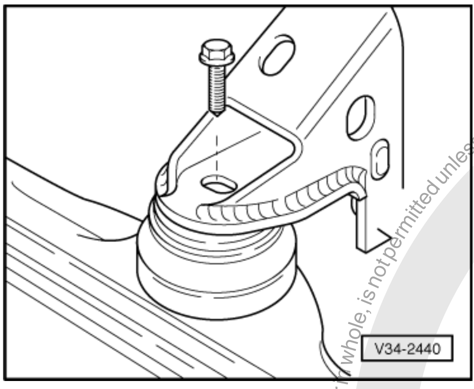

- -> Install front console securing bolt to engine mounting.

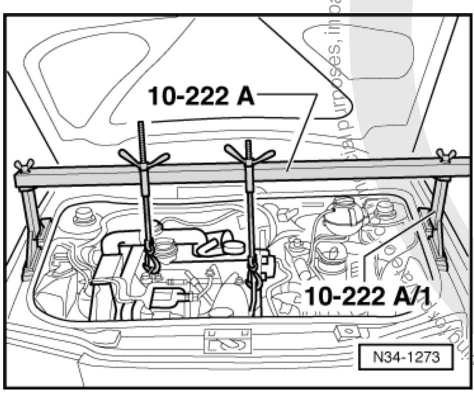

- -> Remove support bar 10-222A.
- Align engine/gearbox mountings stress-free by rocking assembly and tighten to appropriate tightening torque.

=> Repair group 10; Removing and installing engine. Removing and installing engine.

Protected by copyright. Copying for private or commercial purposes, in part or in whole, is not permitted unless authorised by Volkswagen AG. Volkswagen AG does not guarantee or accept any liability with respect to the correctness of information in this document. Copyright by Volkswagen AG.
satelettronica

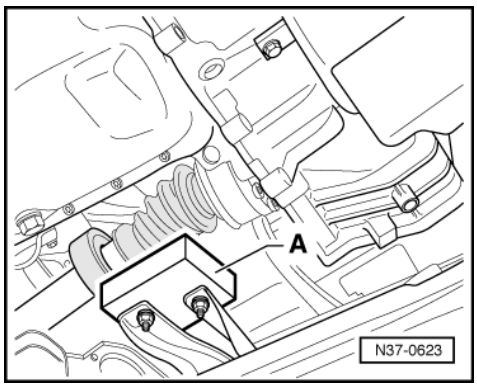

- -> Bolt balance weight -A- onto assembly carrier.

  Installation position: Install so that the larger distance from front edge to hole faces forwards.

- Fit drive shafts to gearbox.
- If it was removed install protective cap for right-hand inner constant velocity joint to engine.
- Reconnect exhaust system.

=> Repair group 26; Removing and installing parts of exhaust system. Removing and installing parts of exhaust system.

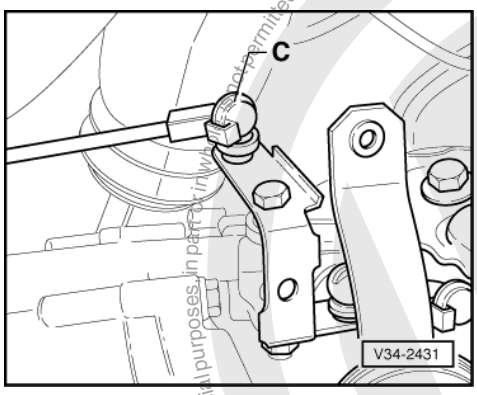

- -> Attach long gate selector rod -C- to relay lever. Lock clamp.

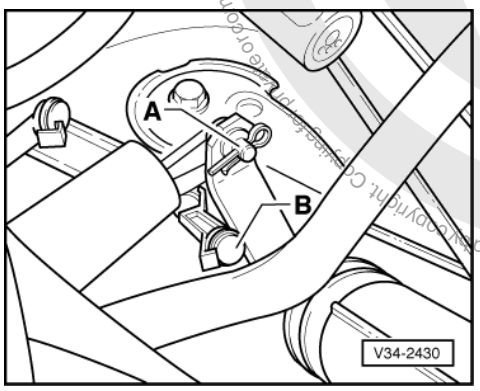

- -> Attach front selector rod -A- and short selector rod -B- to selector shaft lever.

Protected by copyright. Copying for private or commercial purposes, in part or in whole, is not permitted unless authorised by Volkswagen AG. Volkswagen AG does not guarantee or accept any liability with respect to the correctness of information in this document. Copyright by Volkswagen AG.
satelettronica

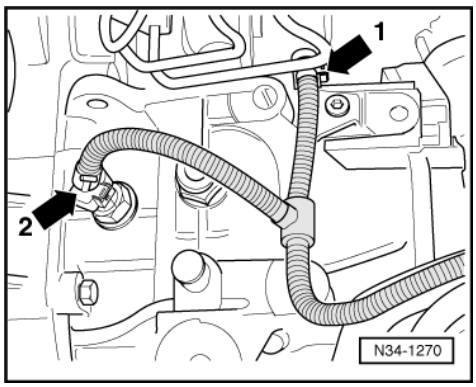

- -> Attach reversing light connector (arrow 2). Attach all other electrical connections and earth wires to gearbox and to the engine/gearbox securing bolts.
- Attach connector to speedometer sender (arrow 1).
- Then fit air cleaner if fitted left in engine compartment

=> Repair group 24; Servicing injection system Servicing injection system

- Install engine cover.
- Reconnect earth strap to battery.

Note:

Note radio coding for vehicles with coded radio.

Check gearbox oil; if necessary top-up to lower edge of oil filler hole, specification =>from Page 2

- Adjusting gear change mechanism => Page 47 .
- Install insulation tray below engine/gearbox, if fitted.

Tightening torques

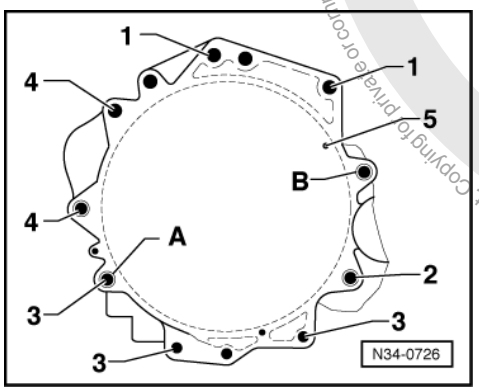

-> Gearbox to engine

Item	Bolt	Qty.	Nm
1	M 12 x 55	2	80
2	M 12 x 55	1	80
3 1)	M 10 x 50	3	25
4 2)	M 12 x 140	2	80
5 3)	M 6 x 8	1	10

Protected by copyright. Copying for private or commercial purposes, in part or in whole, is not permitted unless authorised by Volkswagen AG. Volkswagen AG does not guarantee or accept any liability with respect to the correctness of information in this document. Copyright by Volkswagen AG.
satelettronica

1) Engines with an aluminium sump only. For engines with a steel sump (painted black), Qty. 2 bolts M 7x 12 for flywheel large cover plate = 10 Nm.

2) Also starter to gearbox

3) Flywheel small cover plate

Items A + B - Fitting sleeves

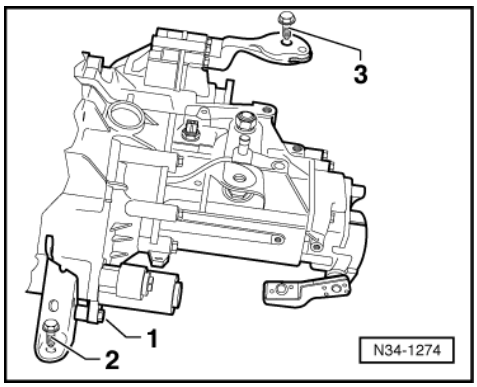

-> Assembly mountings

Pos.	Bolt	Qty.	Nm
1	M 10 x 60	1	45
2	M 10 x 30	1	55
3	M 10 x 45	1	60

Left gearbox console to gearbox	35 Nm
Right engine console to assembly carrier	60 Nm
Engine mounting to body	50 Nm
Drive shaft to flange shaft	45 Nm
Drive shaft protective cover to engine	35 Nm
Vibration damper to subframe	25 Nm
Slave cylinder to gearbox	25 Nm

3 - Checking gear oil

3.1 - Checking gear oil

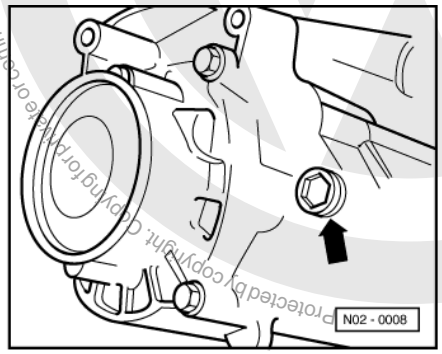

Gear oil specification => from page 2

Copyright by Volkswagen AG. Volkswagen AG does not guarantee or accept any liability with respect to the correctness of information in this document. Copyright by Volkswagen AG. Protected by copyright. Copying for private or commercial purposes, in part or in whole, is not permitted unless authorised by Volkswagen AG.
satelettronica

- Turn steering to left onto stop.
- Remove left-hand side of insulation tray below engine/gearbox, if fitted.
- -> To check gearbox oil remove oil plug (arrow).

The oil level is correct when the gearbox is full to the lower edge of the filler hole.

- Fit plug (arrow).

When filling with new oil note following:

- Remove plug (arrow).
- Top up oil to lower edge of filler hole.
- Fit plug (arrow).

Tightening torque

Oil filler plug	25 Nm

4 - Dismantling and assembling gearbox

4.1 - Dismantling and assembling gearbox

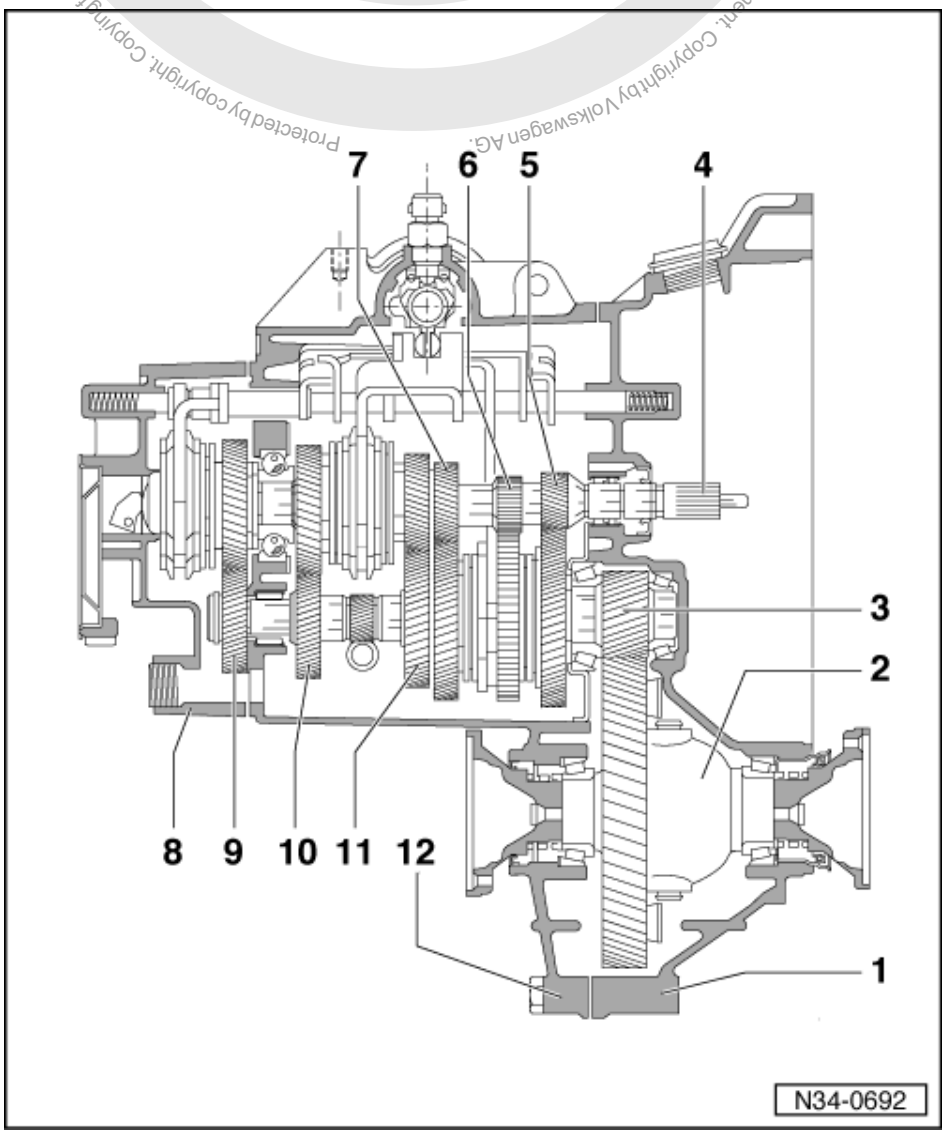

Protected by copyright. Copyright by Volkswagen AG. Volkswagen AG does not guarantee or accept any liability with respect to the correctness of information in this document. Copyright by Volkswagen AG. Commercial purposes, in part or in whole, is not permitted unless authorised by Volkswagen AG.
satelettronica

Protected by copyright. Copying for private or commercial purposes, in part or in whole, is not permitted unless authorised by Volkswagen AG. Volkswagen AG does not guarantee or accept any liability with respect to the correctness of information in this document. Copyright by Volkswagen AG.

4.2 - Overview

1 Clutch housing
- Servicing => Page 107

2 Differential
- Dismantling and assembling => Page 150

3 Output shaft
- Dismantling and assembling => Page 132

4 Input shaft
- Dismantling and assembling => Page 120

5 1st gear
6 Reverse gear
7 2nd gear

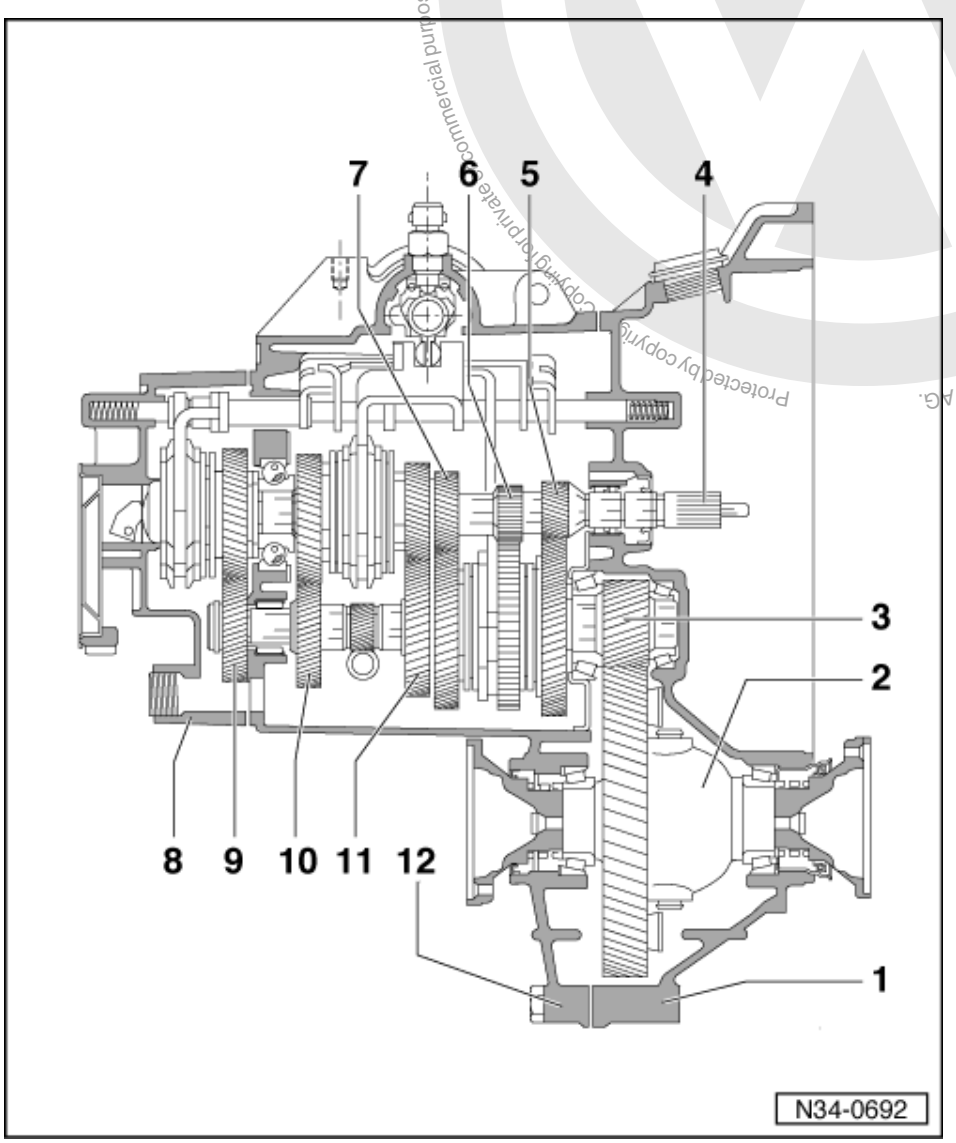

8 Gearbox housing cover
- Servicing => Page 115

9 5th gear
10 4th gear
11 3rd gear

satelettronica

12 Gearbox housing

- Servicing => Page 100

4.3 - Assembly overview

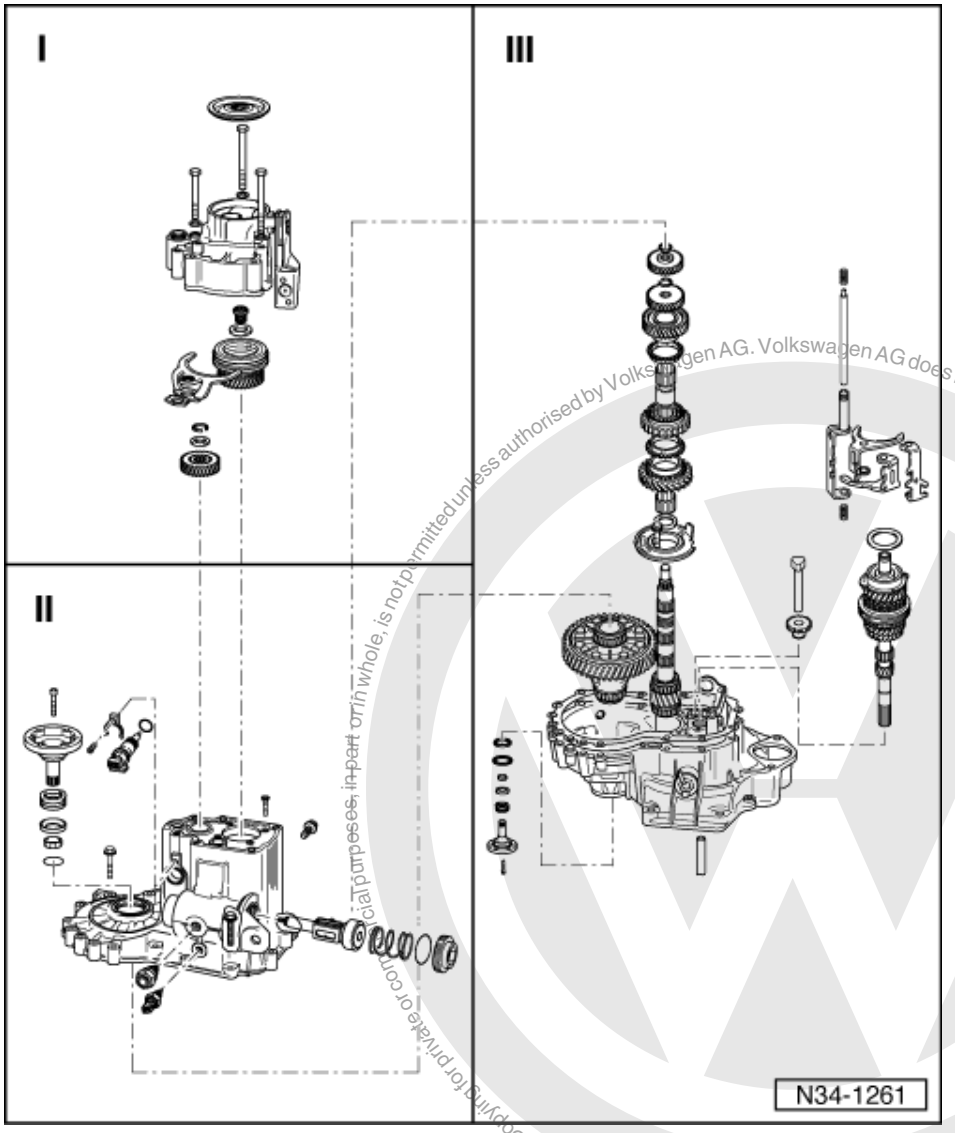

I - Removing and installing gearbox housing cover and 5th gear => Page 68

II - Dismantling and assembling gearbox housing and selector shaft => Page 70

III - Dismantling and assembling input shaft, output shaft, differential and selector forks => Page 74

Protected by Copyright. Copying for private or commercial purposes, in part or in whole, is not permitted unless authorised by Volkswagen AG. Volkswagen AG does not guarantee or accept any liability with respect to the correctness of information in this document. Copyright by Volkswagen AG.
satelettronica

4.4 - Removing and installing gearbox housing cover and 5th gear

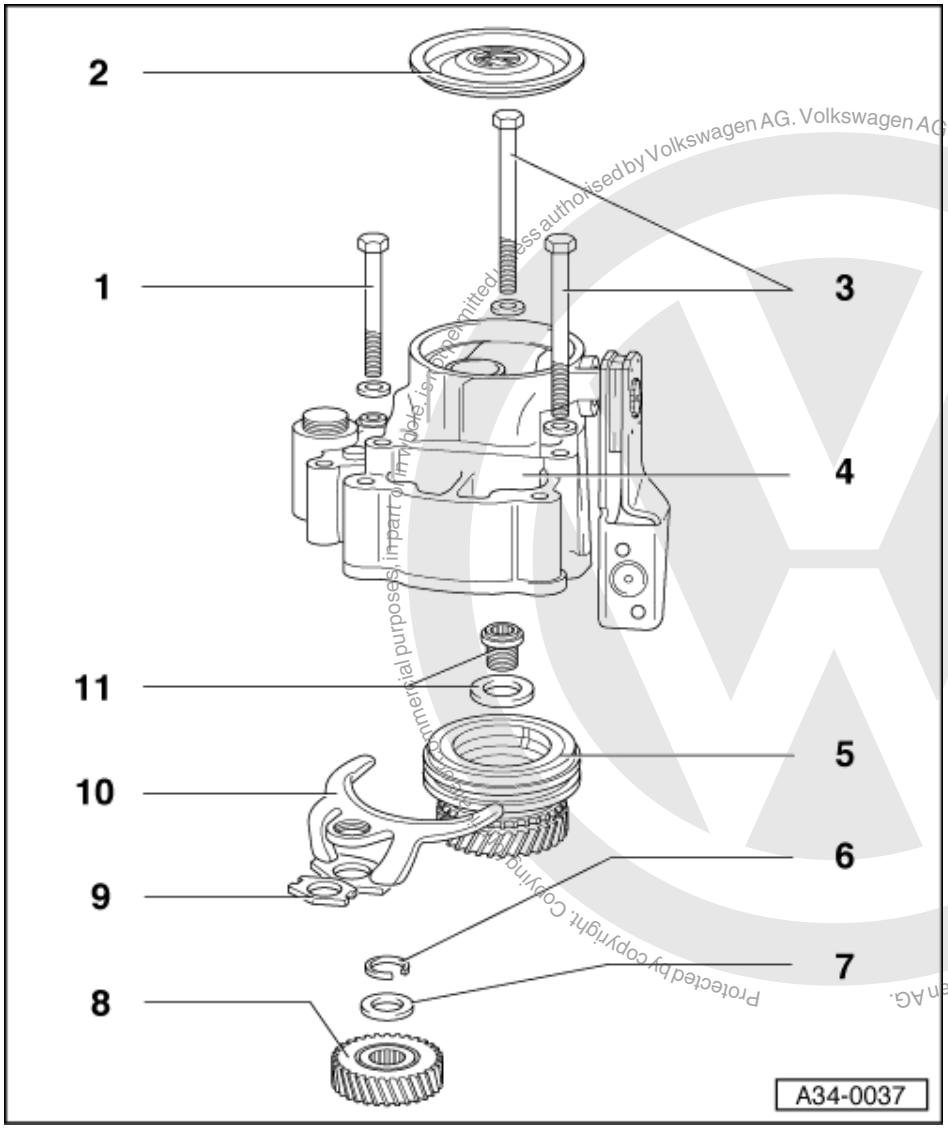

Protected by copyright. Copying for commercial purposes, in part or in whole, is generally not permitted unless authorised by Volkswagen AG. Volkswagen AG does not guarantee or accept any liability with respect to the correctness of information in this document. Copyright by Volkswagen AG.
satelettronica

1 Hexagon bolt, M 8 x 62, 25 Nm
- Qty. 4

2 Sealing cap
- Renew

3 Hexagon bolt, M 8 x 85, 25 Nm
- Qty. 2

4 Gearbox housing cover
- Servicing => Page 115

5 Locking collar/syncro hub for 5th gear with stop ring
- Dismantling and assembling => Page 120

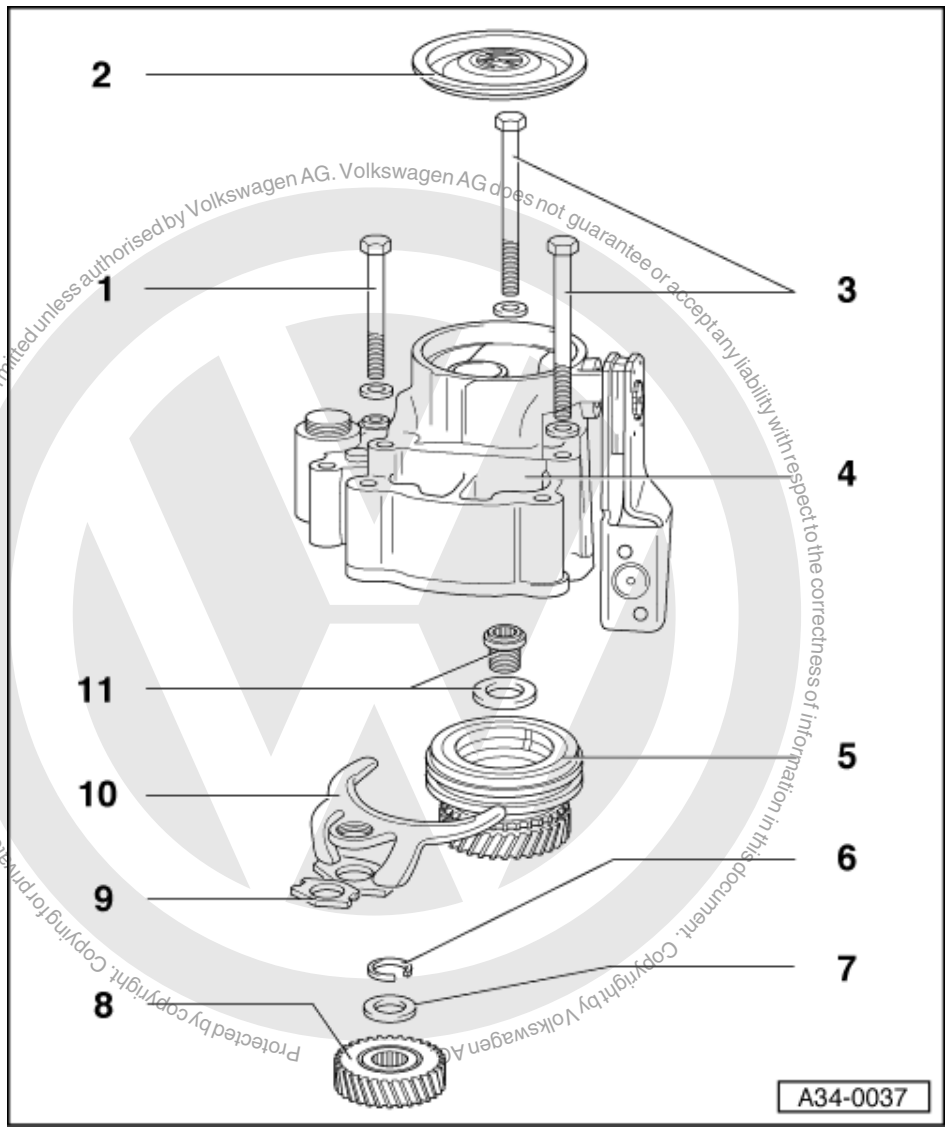

Protected by copyright. Copying for private or commercial purposes, in part or in whole, is not permitted unless authorised by Volkswagen AG. Volkswagen AG does not guarantee or accept any liability with respect to the correctness of information in this document. Copyright by Volkswagen AG.

6 Circlip
- Renew

7 Thrust washer

8 5th speed gear wheel
- Installation position:
  Shallow circumferential groove upwards

9 Locking plate
- Renew

10 5th gear selector fork
- Adjusting =>from page 96

11 Bolt M17, 150 Nm
- Renew
- Coat new bolt with locking fluid D 6
- Note sequence when loosening and tightening bolts => from page 80

satelettronica

4.5 - Removing and installing gearbox housing and selector mechanism

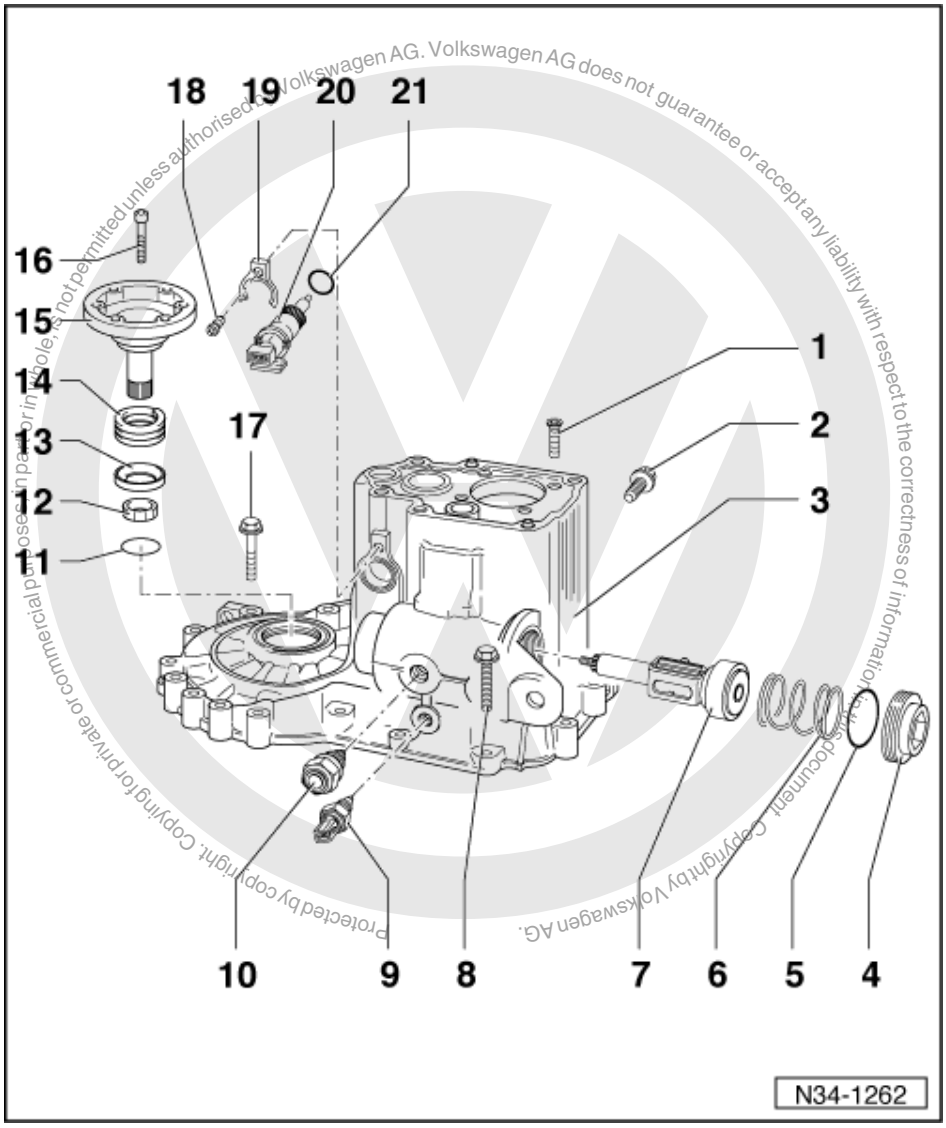

Protected by copyright. Copying for private or commercial purposes, in part or in whole, is not permitted unless authorised by Volkswagen AG. Volkswagen AG does not guarantee or accept any liability with respect to the correctness of information in this document. Copyright by Volkswagen AG.

1 Countersunk screw M7 x 23, 15 Nm
- Qty. 4
- Tensioning plate/grooved ball bearing to gearbox housing

2 Bolt, 20 Nm
- For reverse gear shaft

3 Gearbox housing
- Servicing => Page 100

4 Cover plate, 50 Nm

5 O-ring
- Renew if fitted

6 Spring
- Press selector shaft and selector lever into gate for 3rd and 4th gear

satelettronica

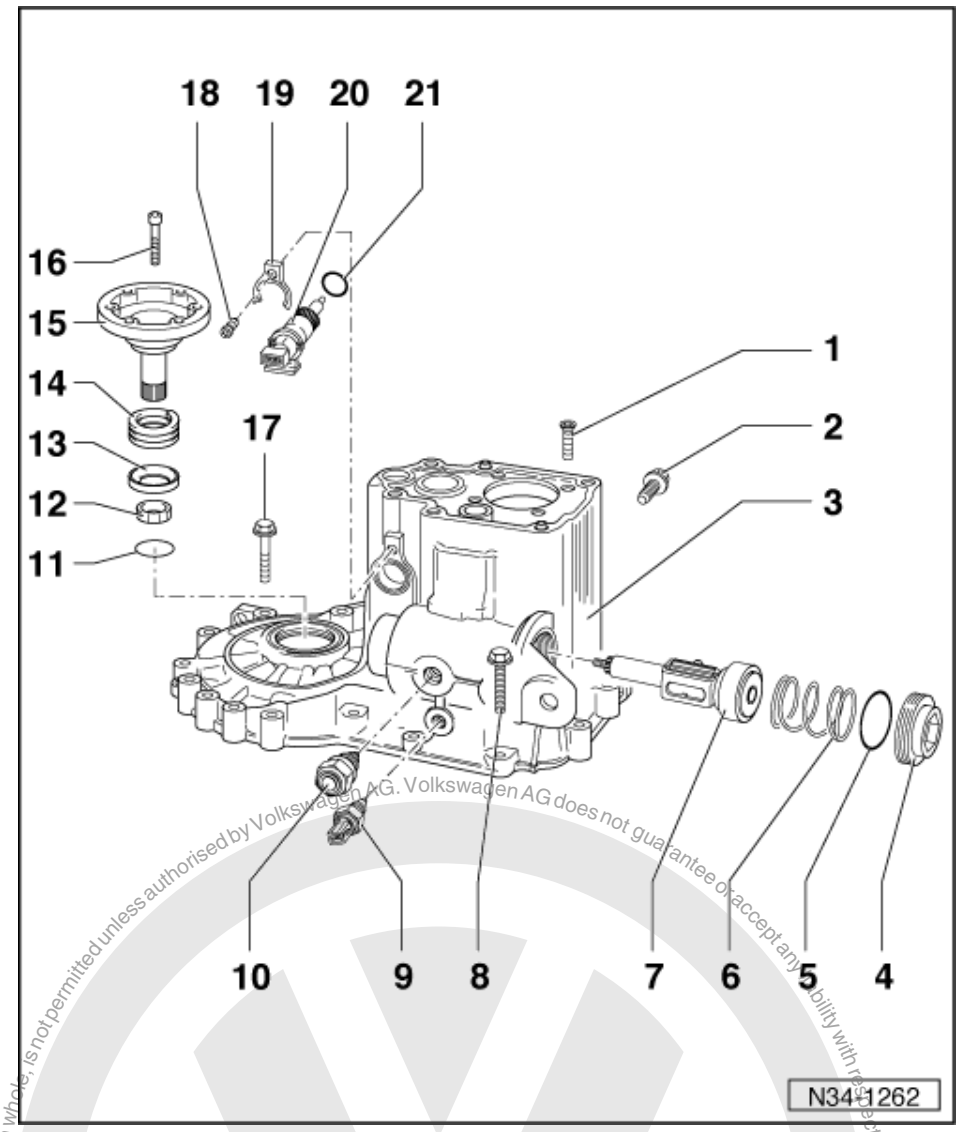

7 Selector shaft
- Dismantling and assembling => Page 100

8 Hexagon bolt M 8 x 35, 25 Nm
- Qty. 2
- Bolt on below locking bolt (item 10)

9 Reversing light switch, 25 Nm

10 Selector shaft locking bolt, 40 Nm

11 Securing clip
- Ensures taper ring, thrust washer and spring are held in position when flange shaft is removed

Protected by copyright. Copying for private or commercial purposes, in part or in whole, is not permitted unless authorised by Volkswagen AG. Volkswagen AG does not guarantee or accept any liability with respect to the correctness of information in this document. Copyright by Volkswagen AG.
satelettronica

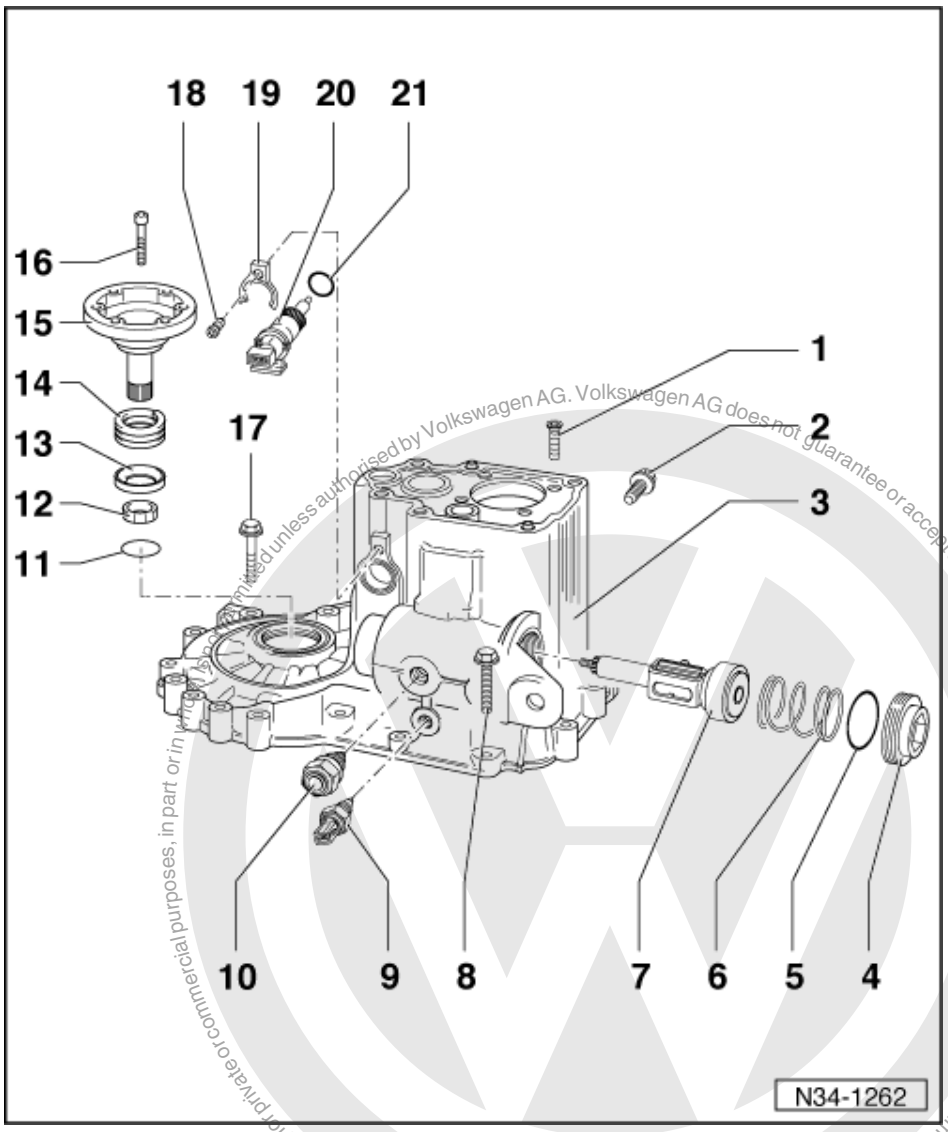

12 Tapered ring
- With grooves to secure thrust washer
- Installation position: Taper towards differential housing

13 Thrust washer
- Installation position:
  Shoulder towards spring, tongue to tapered ring

14 Spring

15 Flange shaft
- Removing and installing => Page 147

16 Hexagon socket head bolt,
25 Nm

17 Hexagon bolt M 8 x 52, 25 Nm
- Qty. 12

18 Speedometer drive securing bolt, 5 Nm

Protected by copyright. Copyright by Volkswagen AG.
Copying for private or commercial purposes, in part or in whole, is not permitted unless authorised by Volkswagen AG. Volkswagen AG does not guarantee or accept any liability with respect to the correctness of information in this document.
satelettronica

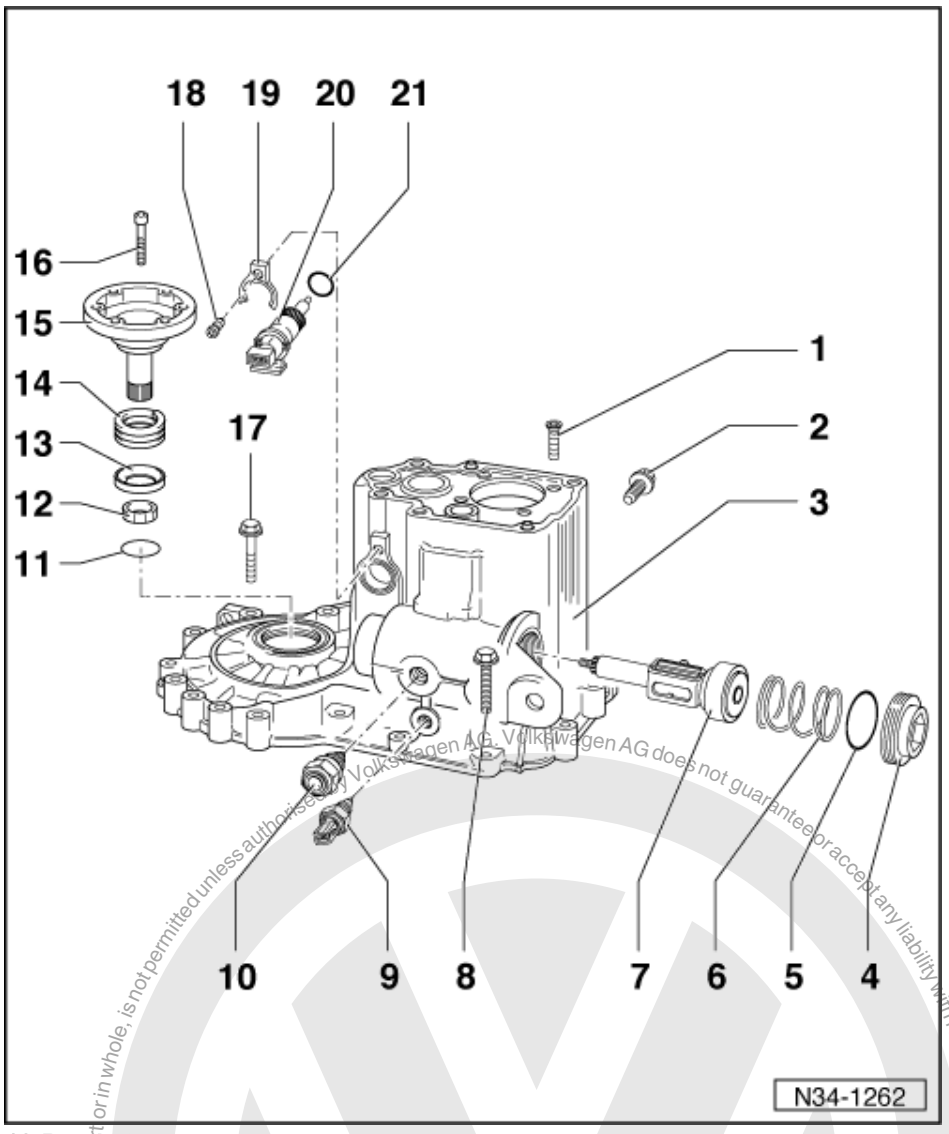

19 Bracket
20 Speedometer drive
21 O-ring
- Always renew

satelettronica
Protected by copyright. Copying for private or commercial purposes, in part or in whole, is not permitted unless authorised by Volkswagen AG. Volkswagen AG does not guarantee or accept any liability with respect to the correctness of information in this document. Copyright by Volkswagen AG.

4.6 - Removing and installing input shaft, output shaft (pinion shaft), differential and selector forks

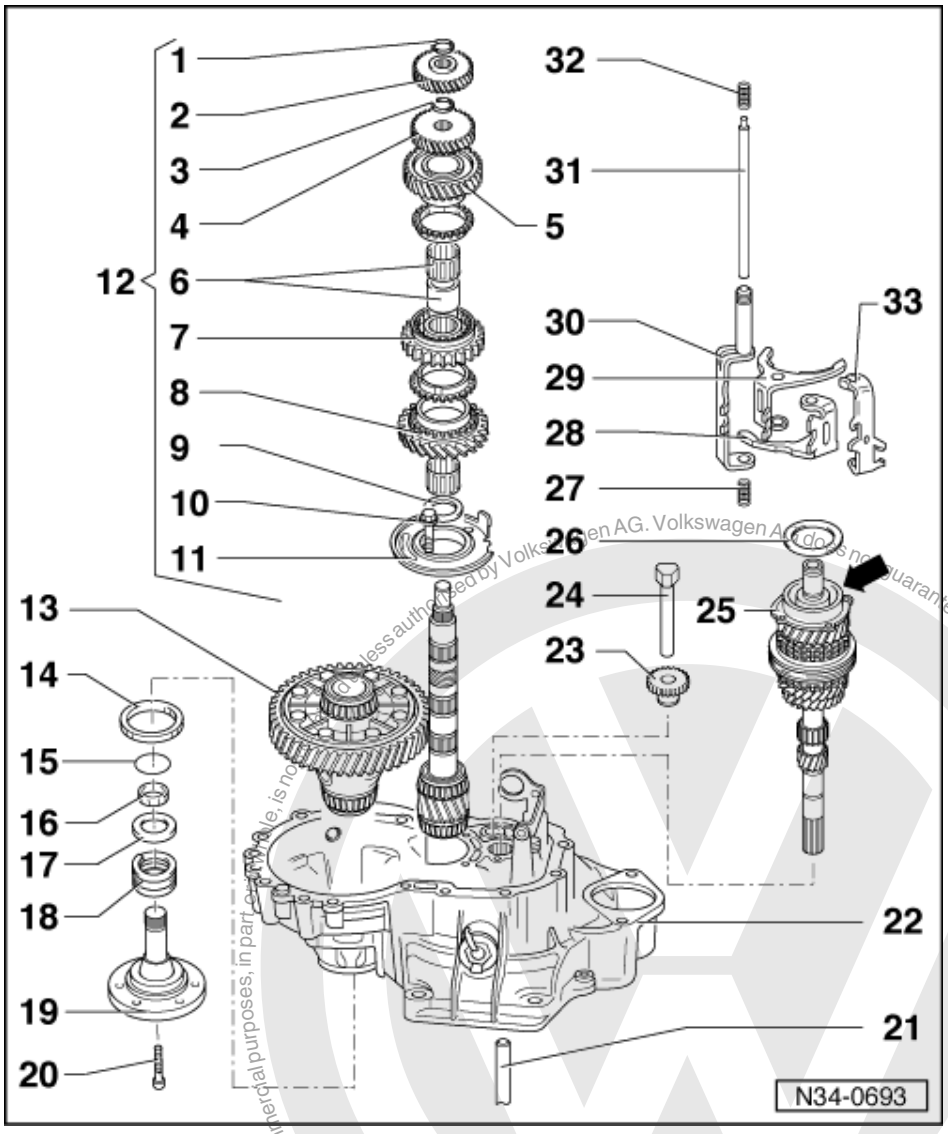

1 Circlip
- Always renew

2 4th gear
- Installation position => from page 80

3 Circlip
- For 3rd gear wheel
- Redetermining thickness => from page 80

4 3rd gear
- Installation position => from page 80
- Adjusting axial play => from page 80

5 Selector gear for 2nd gear

satelettronica

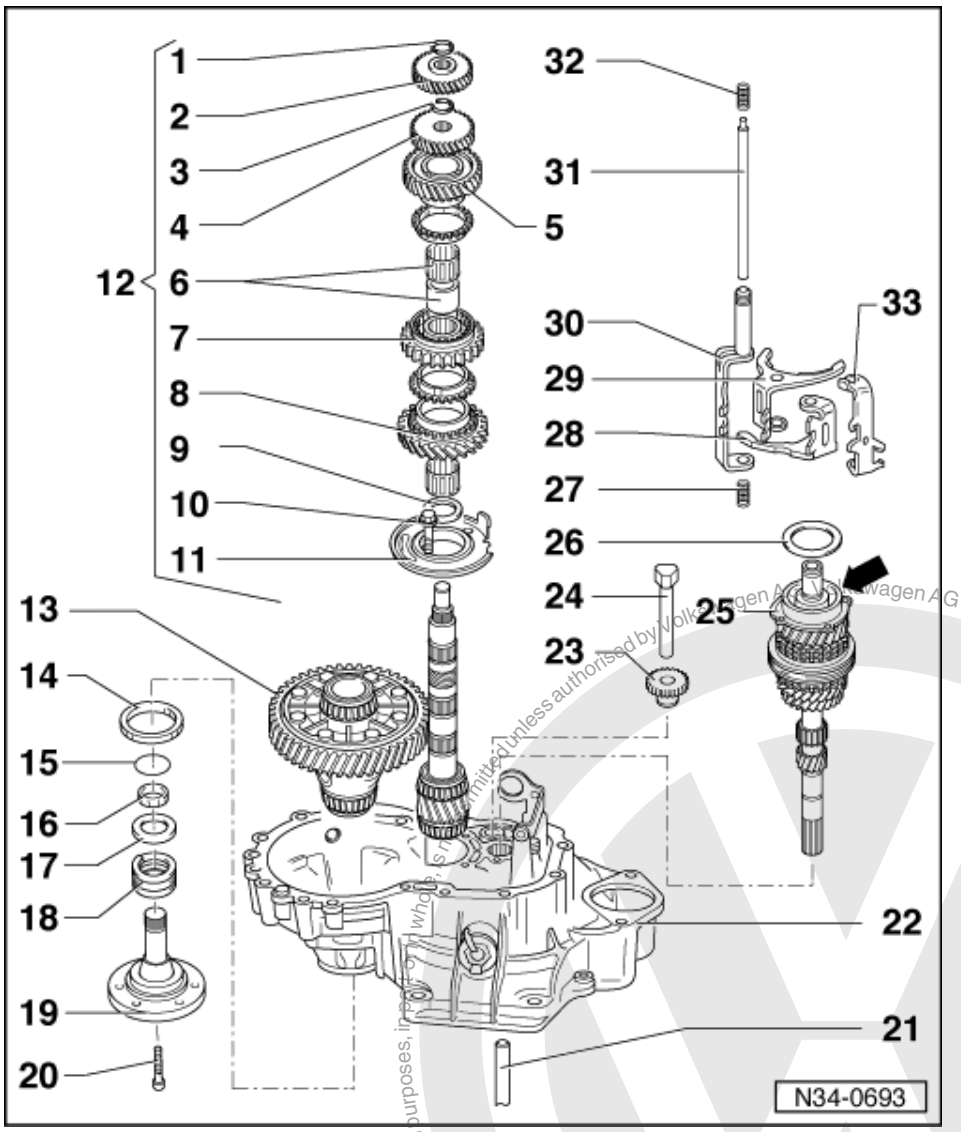

6 Needle roller bearing
- For 2nd gear
- Pulling off inner race => from page 80
- Pressing on inner race=> from page 80

7 1st and 2nd gear locking collar with synchro-hub

8 1st selector gear

9 Thrust washer
- Installation position => from page 80

10 Hexagon bolt, 25 Nm then turn 90°further

11 Bearing support
- With large taper roller bearing outer race and stop for reverse gear wheel

12 Output shaft, complete
- Dismantling and assembling => Page 132

Protected by copyright. Copying for private or commercial purposes, in part or in whole, is not permitted unless authorised by Volkswagen AG. Volkswagen AG does not guarantee or accept any liability with respect to the correctness of information in this document. Copyright by Volkswagen AG.
satelettronica

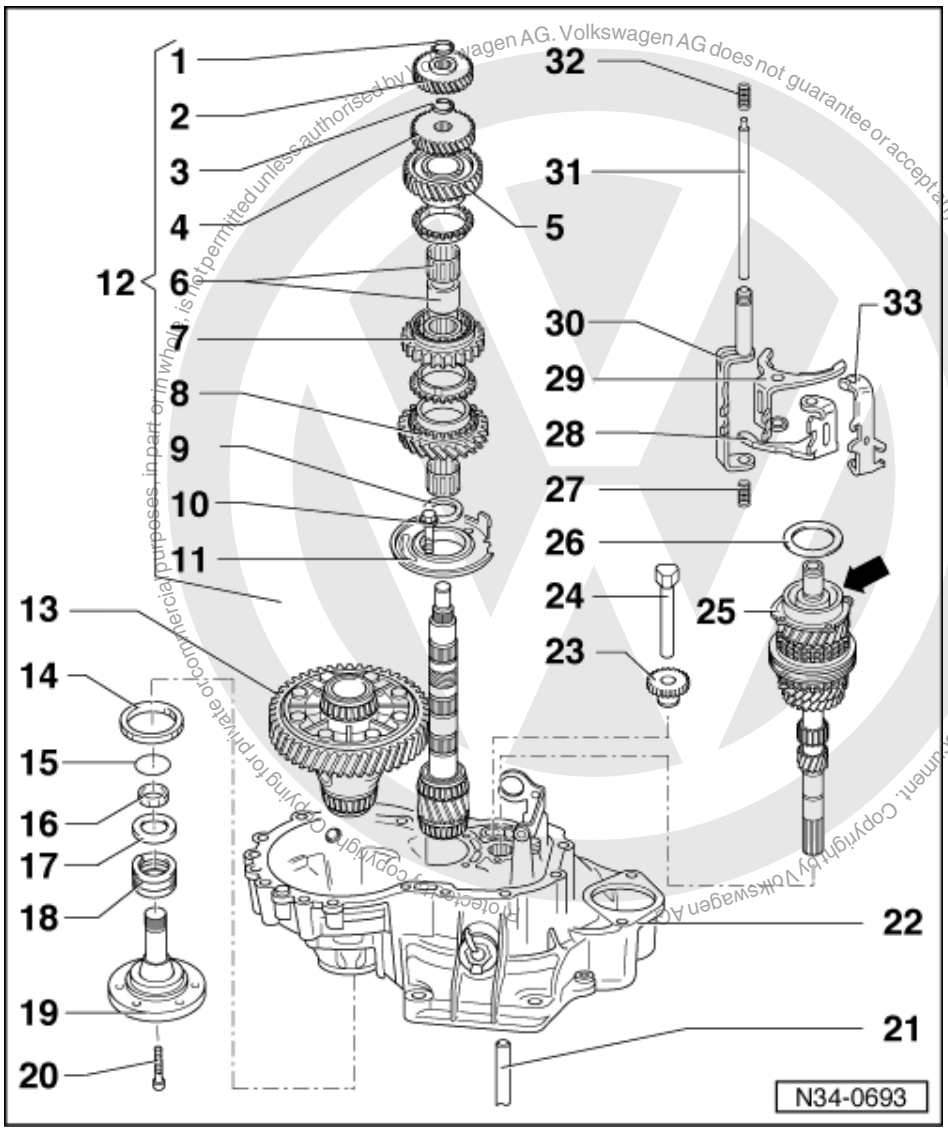

13 Differential

- Dismantling and assembling => Page 150

14 Oil seal

- Renewing => Page 147

15 Securing clip

- Ensures taper ring, thrust washer and spring are held in position when flange shaft is removed

16 Tapered ring

- With grooves to secure thrust washer
- Installation position: Taper towards differential housing

17 Thrust washer

- Installation position:
  Shoulder towards spring, tongue to tapered ring

18 Spring

satelettronica

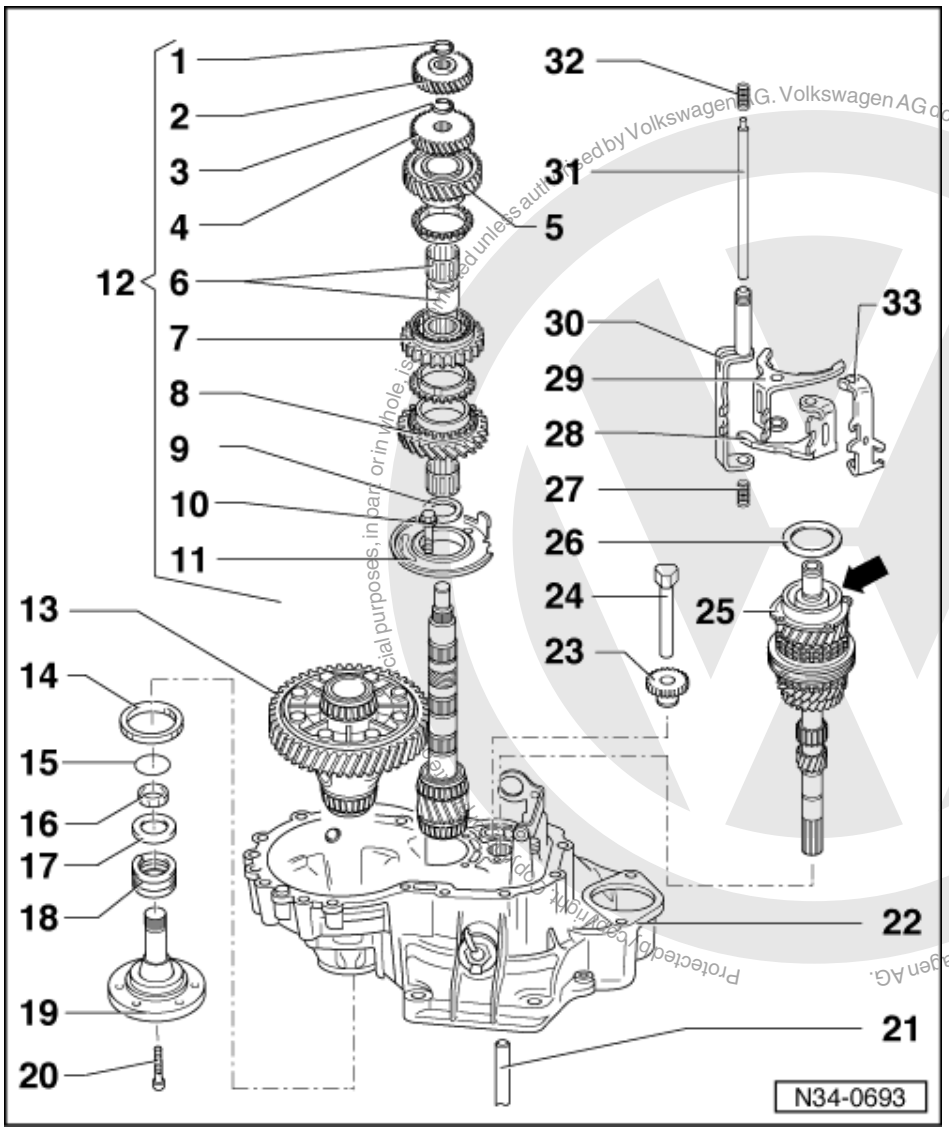

19 Flange shaft

- Removing and installing => Page 147

20 Hexagon socket head bolt, 25 Nm

21 Clutch push rod

22 Clutch housing

- Servicing => Page 107

23 Reverse gear

24 Reverse gear shaft

25 Input shaft

- Dismantling and assembling => Page 120
- Pressing off grooved ball bearing (arrow) before installing => from page 120
- Fitting new grooved ball bearing to gearbox housing => from page 80

satelettronica

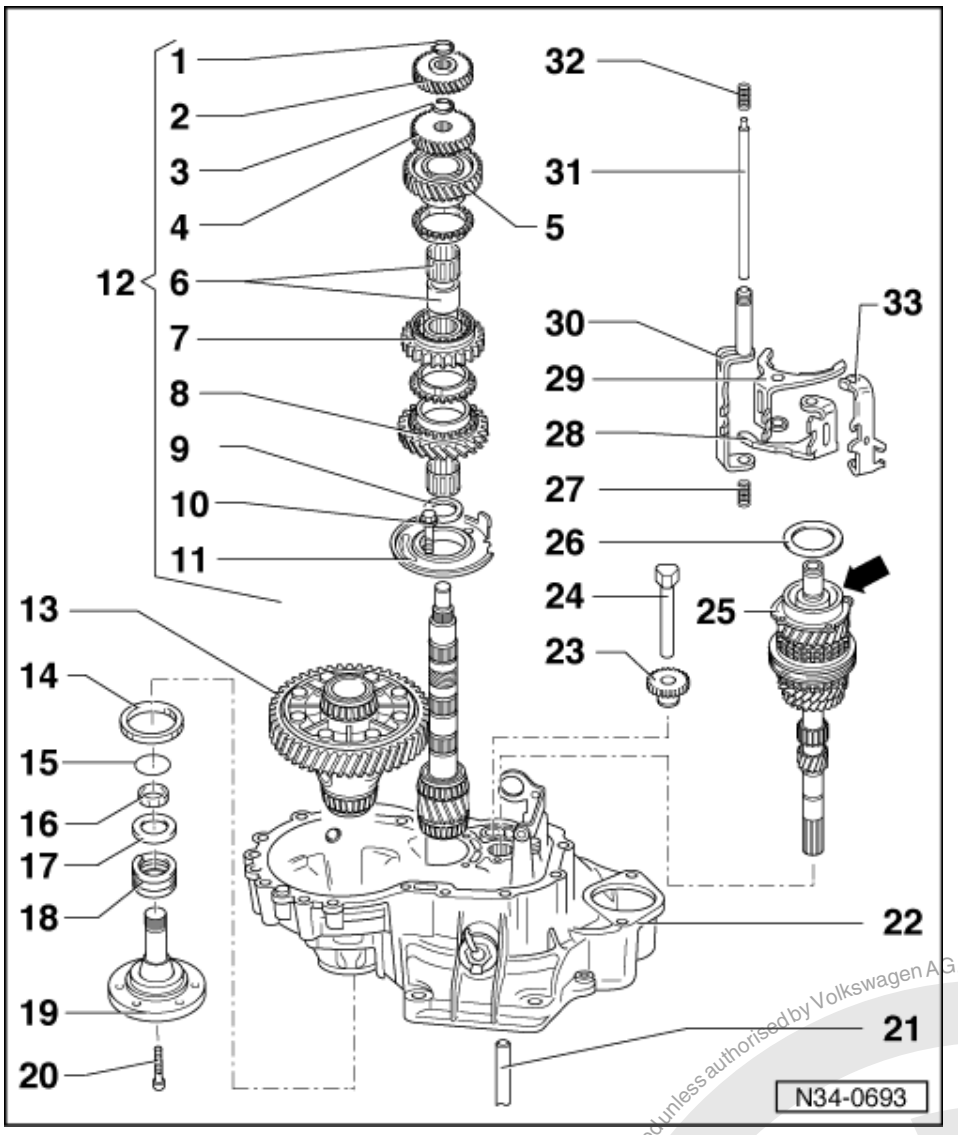

26 Shim

- It is not necessary to adjust the input shaft. It is important, however, that the shim determined during production is re-installed after performing repairs. It is also possible that no shim is fitted, in this case reassemble without a shim.
  When replacing the bearing or clutch housing or gearbox housing, it is no longer necessary to insert the shim.

27 Spring

28 Selector fork, 1st and 2nd gear

29 Selector fork, 3rd and 4th gear

30 Selector bridge with selector tube for 5th gear

Protected by copyright. Copying for private or commercial purposes, in part or in whole, is not permitted unless authorised by Volkswagen AG. Volkswagen AG does not guarantee or accept any liability with respect to the correctness of information in this document. Copyright by Volkswagen AG.
satelettronica

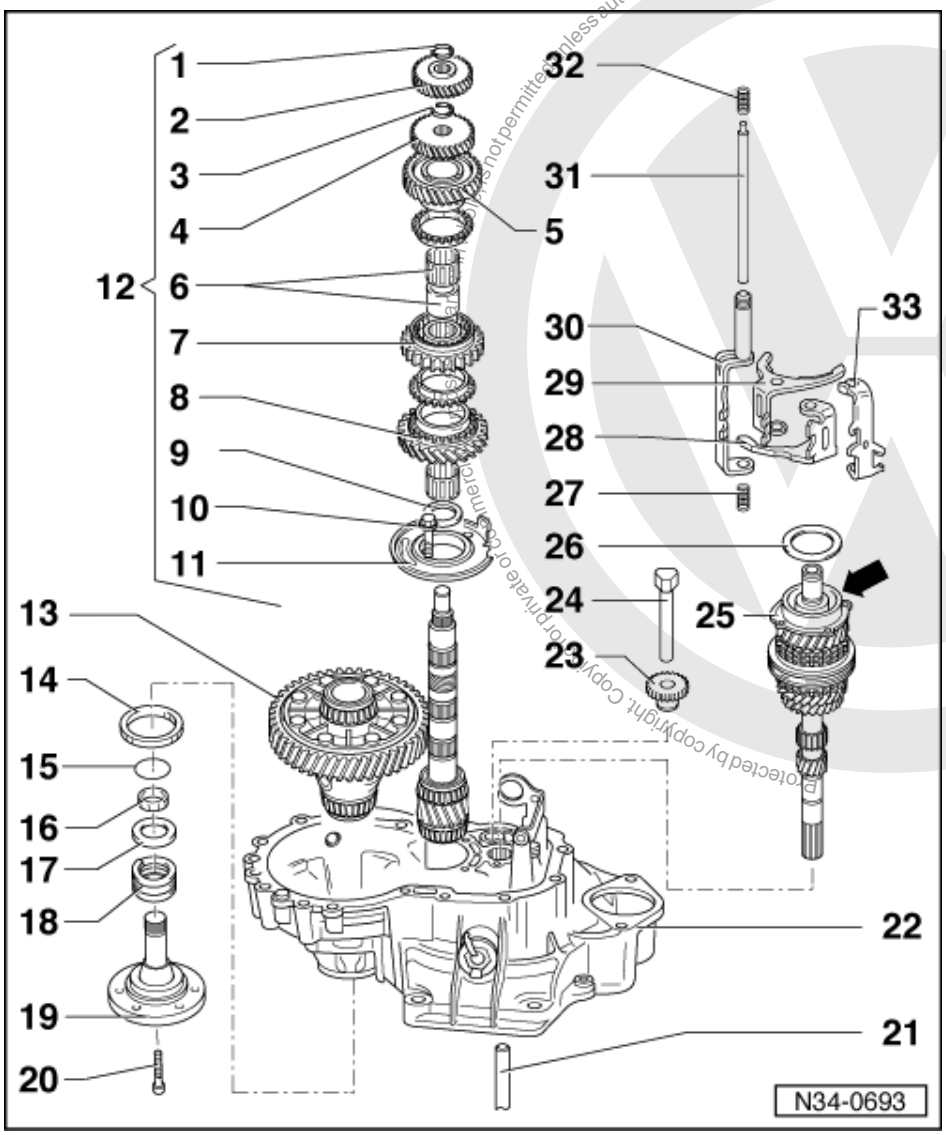

31 Selector rod
32 Spring
33 Selector fork, reverse gear

satelettronica

4.7 - Dismantling and assembling sequence

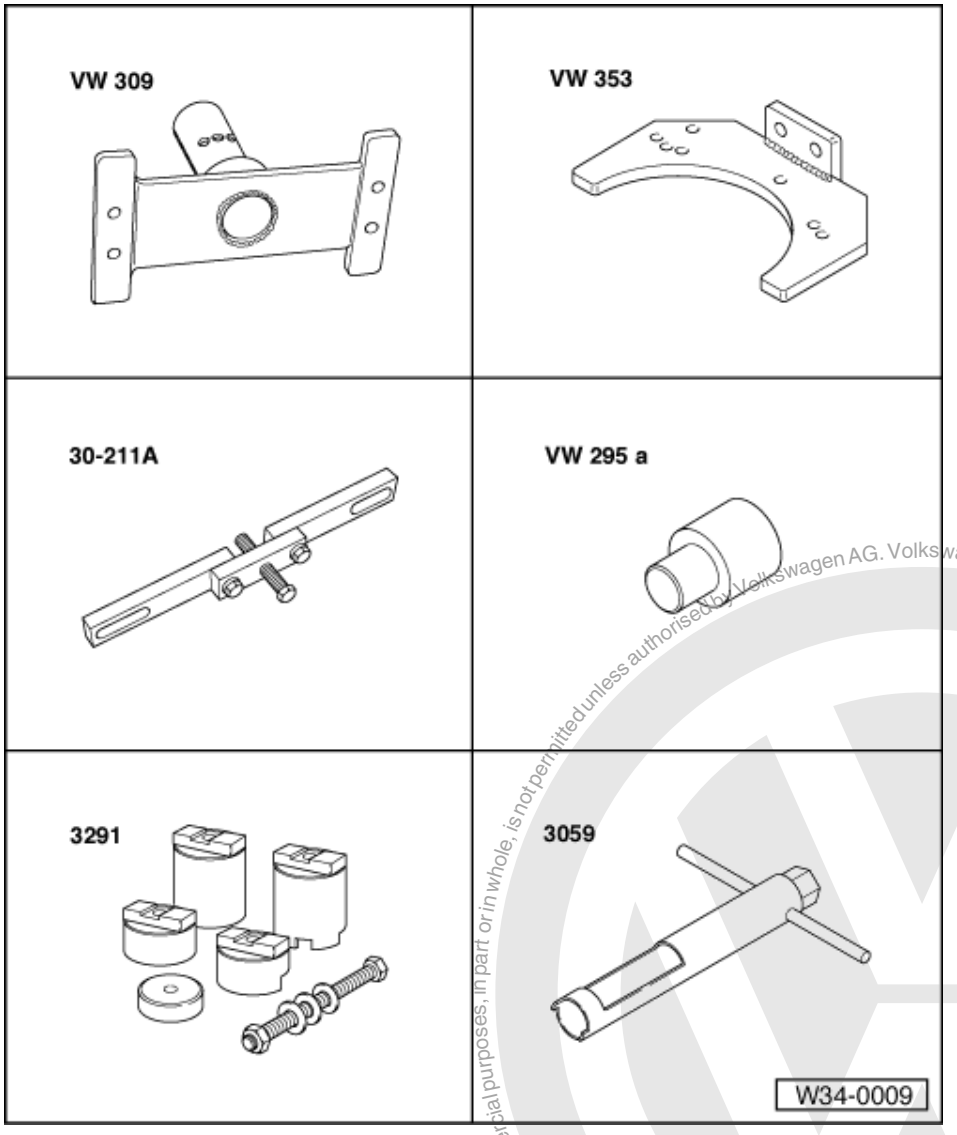

Dismantling and assembling gearbox housing cover, gearbox housing, selector mechanism, input shaft, output shaft (pinion shaft), differential and selector forks

Special tools and workshop equipment required

- VW 309 Holding plate
- VW 353 Gearbox support
- 30-211 A Support bridge
- VW 295a Adapter
- 3291 Spindle
- 3059 Box wrench

Protected by copyright. Copying for private or commercial purposes, in part or in whole, is not permitted unless authorised by Volkswagen AG. Volkswagen AG does not guarantee or accept any liability with respect to the correctness of information in this document. Copyright by Volkswagen AG.
satelettronica

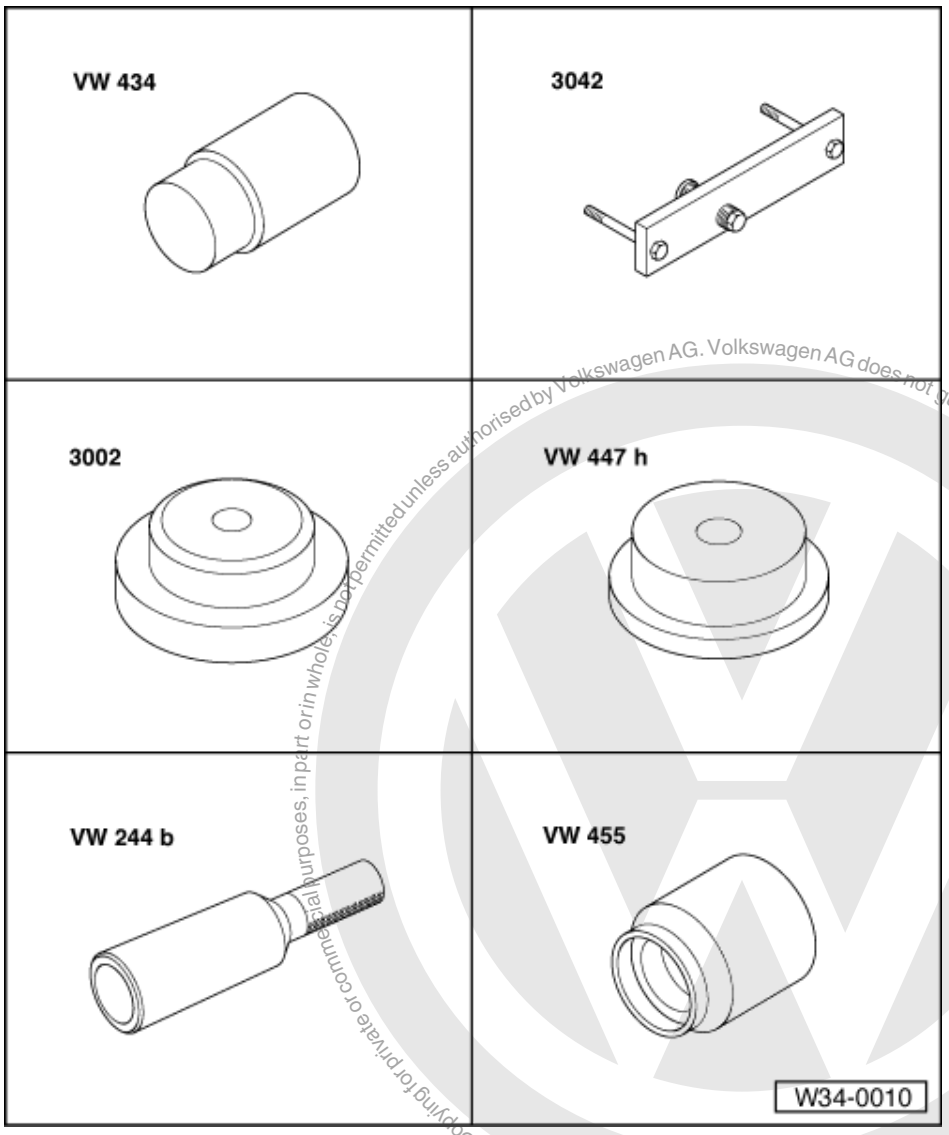

Protected by copyright. Copying for private or commercial purposes, in part or in whole, is not permitted unless authorised by Volkswagen AG. Volkswagen AG does not guarantee or accept any liability with respect to the correctness of information in this document. Copyright by Volkswagen AG.

satelettronica

Special tools and workshop equipment required

- VW 434 Press tool
- 3042 Puller
- 3002 Press tool
- VW 447 H Press plate
- VW 244 B Fitting sleeve
- VW 455 Fitting sleeve

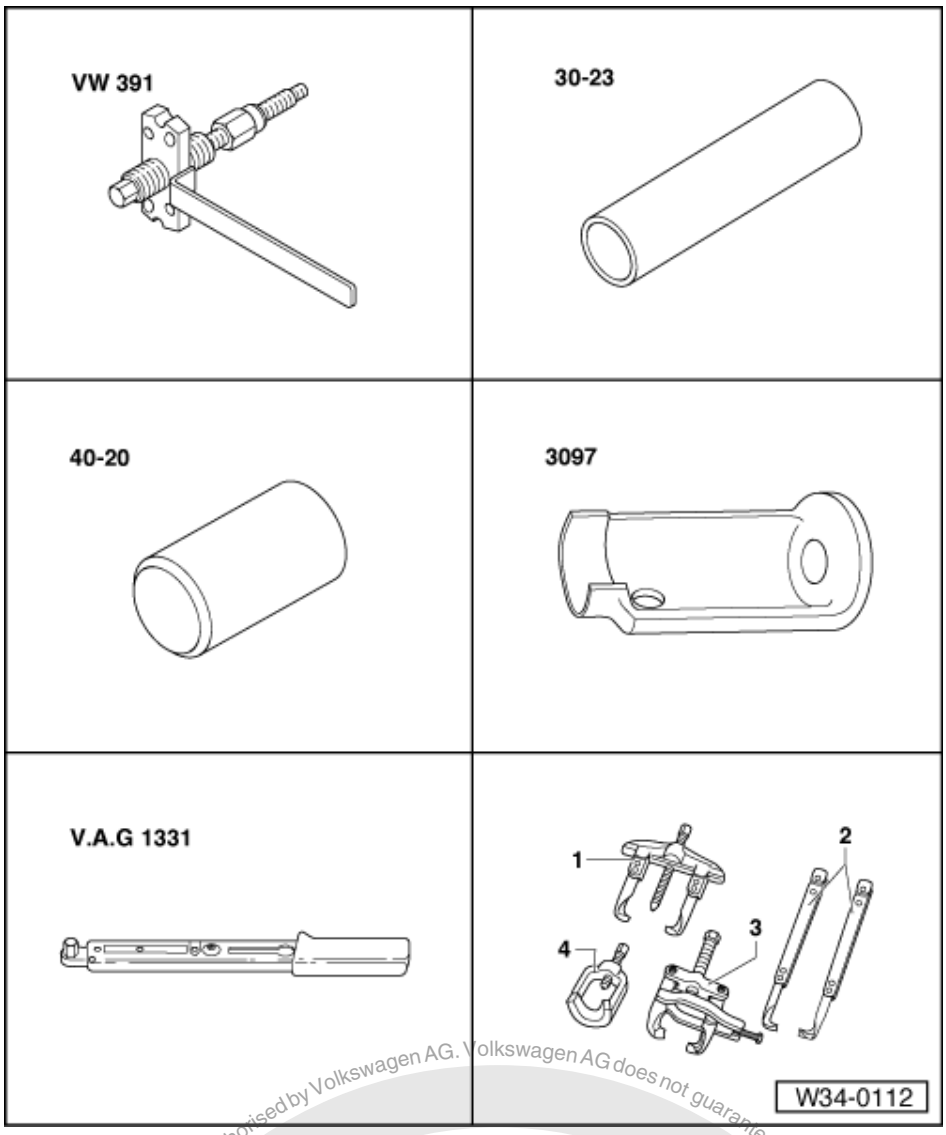

Special tools and workshop equipment required

- VW 391 Drive shaft fitting appliance
- 30-23 Extension
- 40-20 Press tool
- 3097 Fitting tool
- V.A.G 1331 Torque wrench
- 1 - Kukko 20/10 Two-arm puller
- 2 - Legs Matra V/170
- 2 - Kukko 1-250 Puller legs

Protected by copyright. Copying for private or commercial purposes, in part or in whole, is not permitted unless authorised by Volkswagen AG. Volkswagen AG does not guarantee or accept any liability with respect to the correctness of information in this document. Copyright by Volkswagen AG.
satelettronica

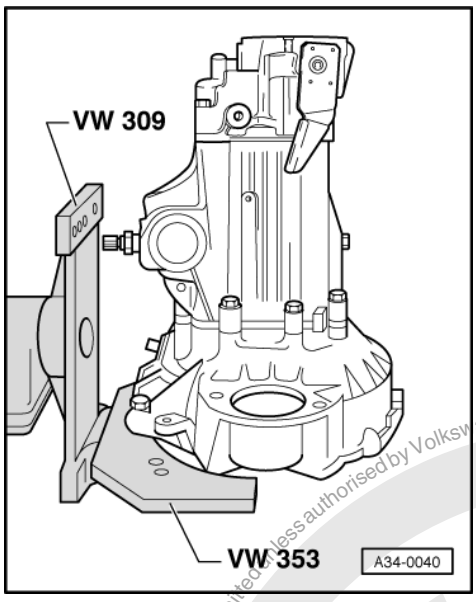

Dismantling

- Drain gearbox oil.
- -> Mount gearbox on repair stand.

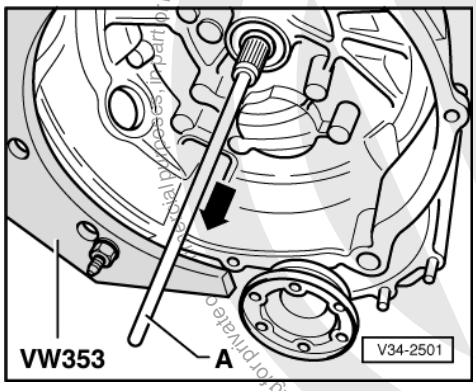

- -> Pulling clutch push rod -A- out from input shaft

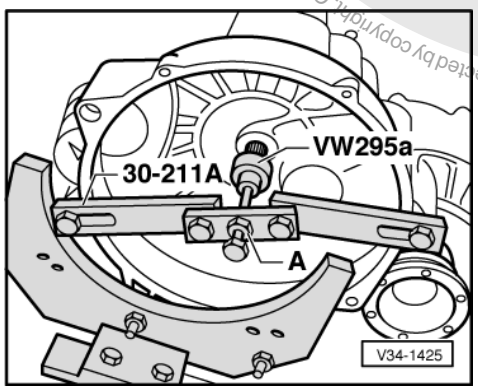

- -> Assemble support bridge 30-211 A for input shaft.

  A - Lock nut M 12

- Lift VW 295 onto stop on input shaft using screw and lock nut -A-.

satelettronica

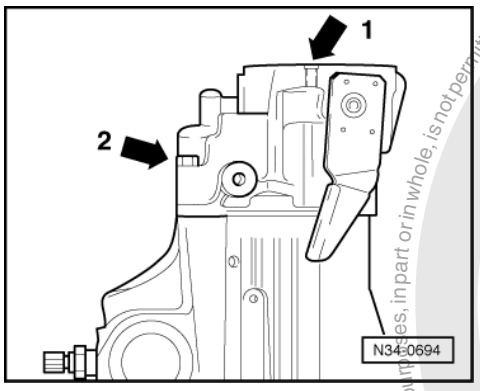

- Pierce sealing cap (arrow 1) and lever out from gearbox housing cover.
- -> Unbolt gearbox housing cover (arrow 2) (Qty. 6 bolts).

Note:

One of the 6 bolts is located inside the cover.

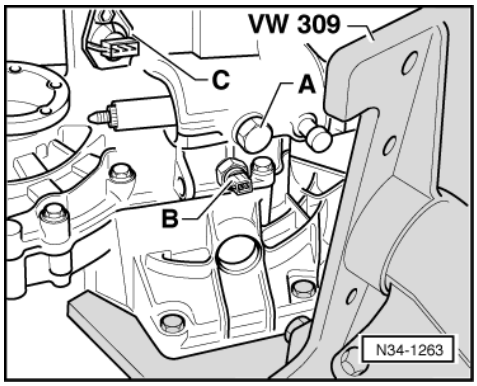

- -> Remove selector shaft locking bolt -A- and reversing light switch -B-.
- Remove speedometer drive -C-.

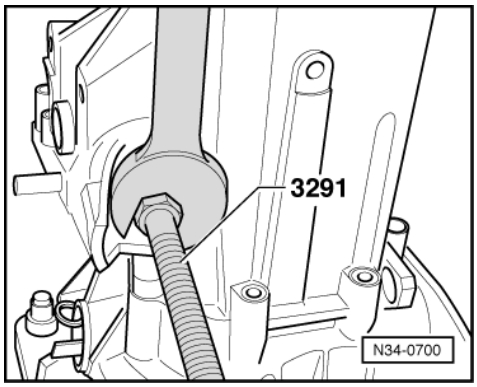

- -> Unscrew selector shaft sealing cover and remove together with spring.
- Bring selector shaft to neutral and pull out from gearbox housing.

Protected by copyright. Copying for private or commercial purposes, in part or in whole, is not permitted unless authorised by Volkswagen AG. Volkswagen AG does not guarantee or accept any liability with respect to the correctness of information in this document. Copyright by Volkswagen AG.
satelettronica

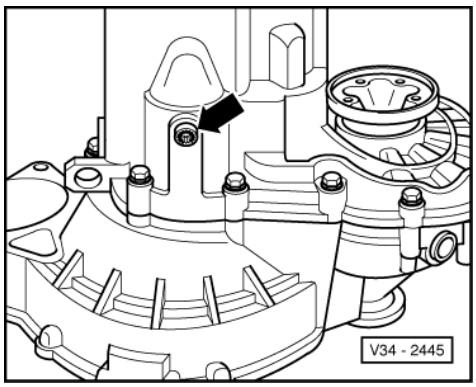

- -> Remove Torx bolt (arrow) for securing reverse gear wheel shaft.

- -> Remove both flange shafts.
- Take out flanged shafts along with springs, thrust washers and tapered rings.

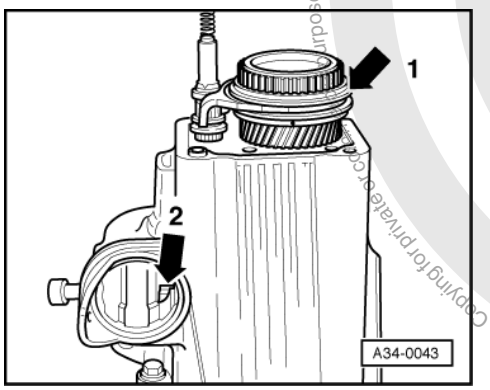

- -> Select 5th gear (arrow 1).
- Select reverse gear (arrow 2) (forward selector jaw facing downwards).

Protected by copyright. Copying for private or commercial purposes, in part or in whole, is not permitted unless authorised by Volkswagen AG. Volkswagen AG does not guarantee or accept any liability with respect to the correctness of information in this document. Copyright by Volkswagen AG.
satelettronica

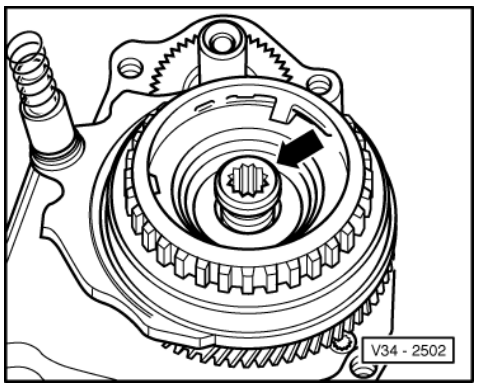

- -> Remove syncro body bolt (arrow) with 12 mm multi-point insert.

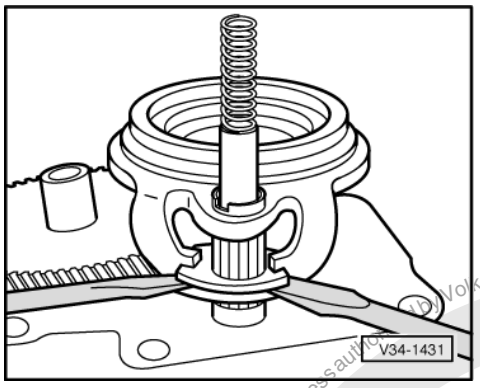

- -> Push selector tube securing plate free.

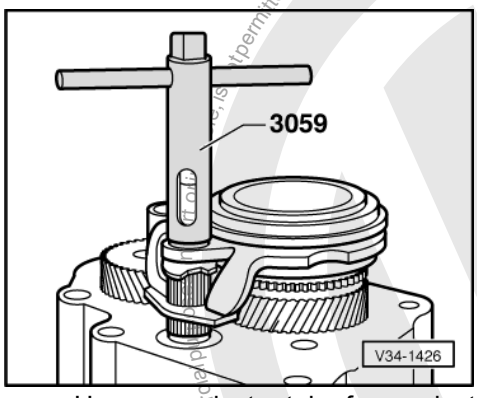

- -> Unscrew selector tube from selector fork - anti-clockwise -.

Note:
Do not pull selector rod out from selector tube.

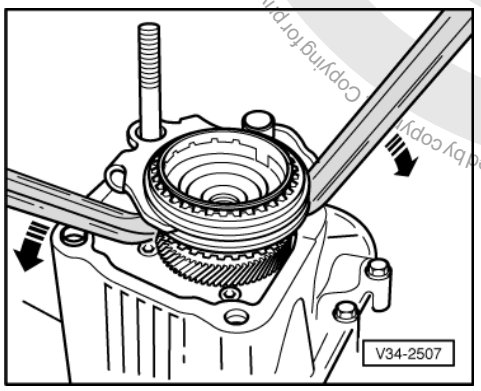

Copyright by Volkswagen AG. Volkswagen AG does not guarantee or accept any liability with respect to the correctness of information in this document. Copyright by Volkswagen AG.
Protected by copyright. Copying for private or commercial purposes, is not permitted unless authorised by Volkswagen AG.
satelettronica

- -> Remove synchro-hub complete with sliding gear wheel and selector fork for 5th gear, prize free slightly with 2 levers if necessary but do not damage housing sealing surfaces.
- Note thrust washer for sliding gear wheel below synchro-hub.

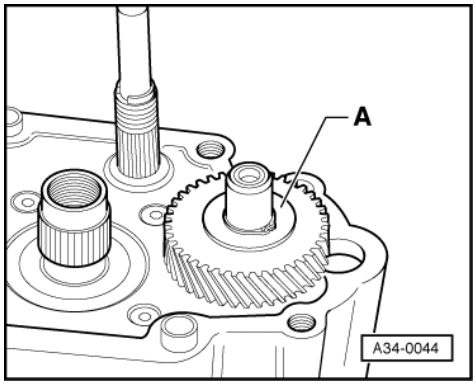

- -> Take off circlip and thrust washer -A- for 5th gear wheel.

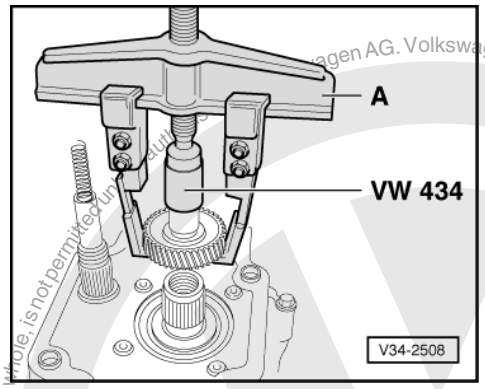

- -> Pull off 5th gear

  A - Two arm puller e.g. Kukko 20/10 with Matra V/170 hooks.

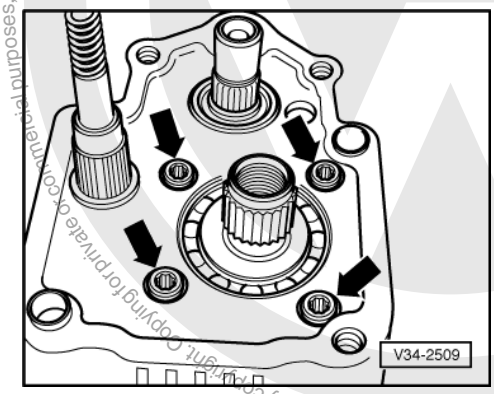

- -> Unbolt tensioning plate (support for input shaft ball bearing) (arrows).
- Remove securing bolts gearbox housing to clutch housing.

satelettronica

Volkswagen AG does not guarantee or accept any liability with respect to the correctness of information in this document. Copyright by Volkswagen AG.
Copying for private or commercial purposes, in part or in whole, is not permitted unless authorised by Volkswagen AG.

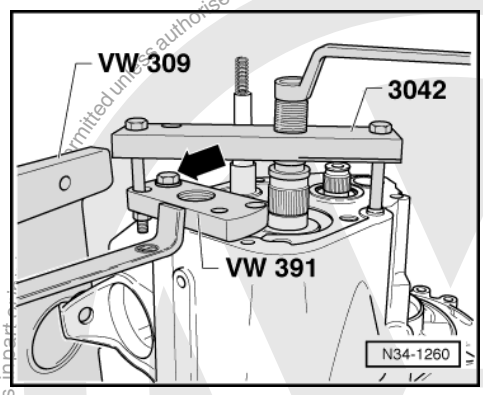

-> Secure assembly tool VW 391 to gearbox housing with bolt -arrow-.
Secure puller 3042 as illustrated.
Pull off gearbox housing.

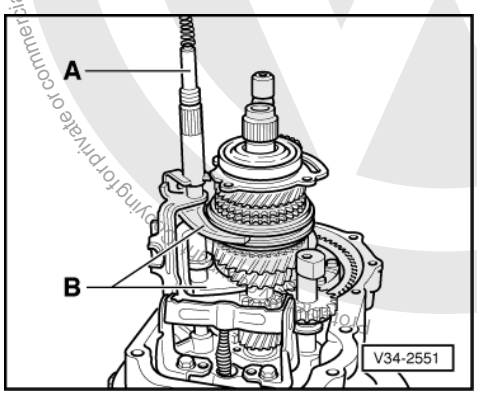

- -> Pull selector rod -A- out of hole in clutch housing and swing out selector forks -B-.

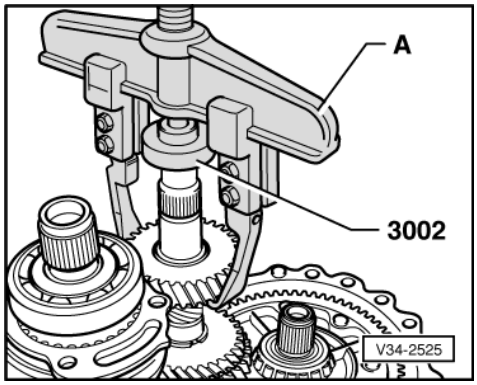

- Remove securing ring for 4th gear/output shaft.
- -> Pull off 4th gear wheel

A - Two arm puller e.g. Kukko 20/10 with Matra V/170 hooks.

satelettronica

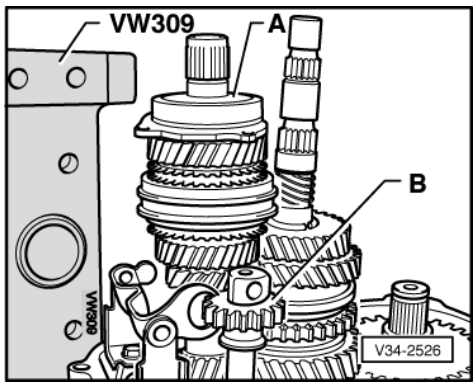

- -> Take out complete input shaft -A-.

Note:

Reverse gear -B- must not be selected.

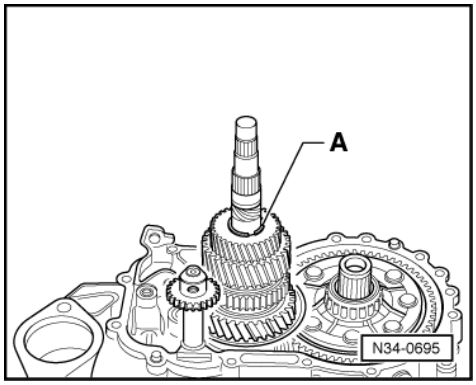

- -> Take off circlip -A- on 3rd gear wheel.

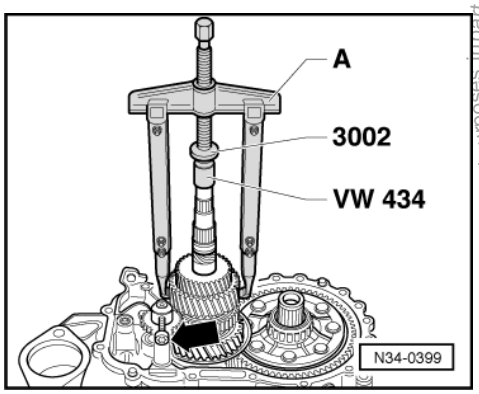

- -> Press off 3rd gear wheel via 2nd gear wheel.

  A - Two arm puller e.g. Kukko 20/10 with hooks of 250 mm tensioning depth.

- Take off synchro-ring and needle bearing.
- Drive out reverse gear shaft via screwed-in bolt (arrow) using a synthetic head hammer.
- Take reverse gear out of relay lever.

Protected by copyright. Copying for private or commercial purposes, in part or in whole, is not permitted unless authorised by Volkswagen AG. Volkswagen AG does not guarantee or accept any liability with respect to the correctness of information in this document. Copyright by Volkswagen AG.
satelettronica

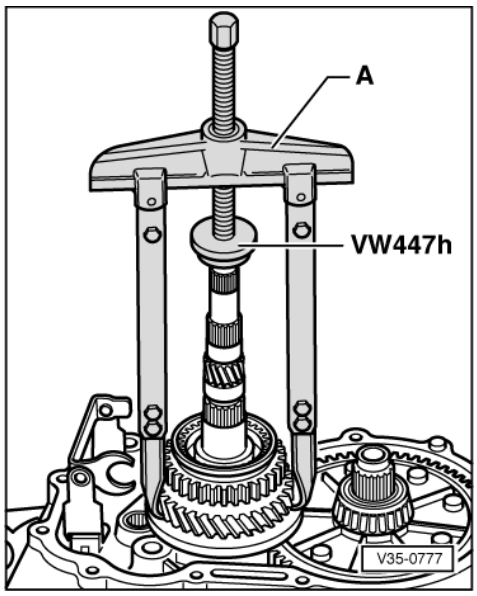

- -> Pull off synchro-hub/locking collar and 1st gear sliding wheel together with 2nd gear needle roller bearing inner race.

  A - Two arm puller e.g. Kukko 20/10 using hooks with a 250 mm tensioning depth.

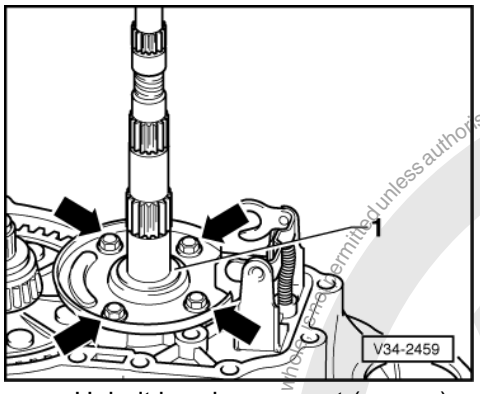

- -> Unbolt bearing support (arrows) and take out output shaft. Note thrust washer -1-.
- Take out differential.

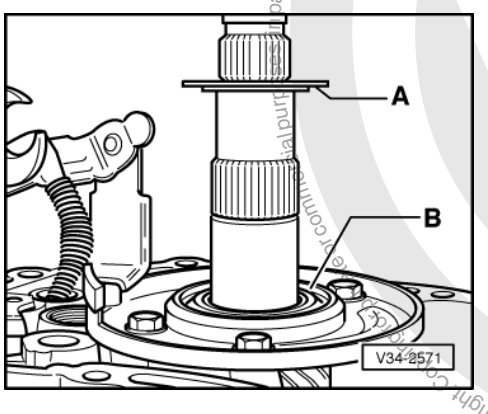

Assembling

- Install differential.
- Insert output shaft.
- Tighten nuts for output shaft bearing support.

Protected by copyright. Copyright by Volkswagen AG. Volkswagen AG does not guarantee or accept any liability with respect to the correctness of information in this document. Copyright by Volkswagen AG. Reproduction of any part of this document is not permitted unless authorised by Volkswagen AG.
satelettronica

- -> Installation position of thrust washer for 1st gear sliding wheel needle bearing.

  Shoulder -A- on inner diameter faces towards bearing support -B-.

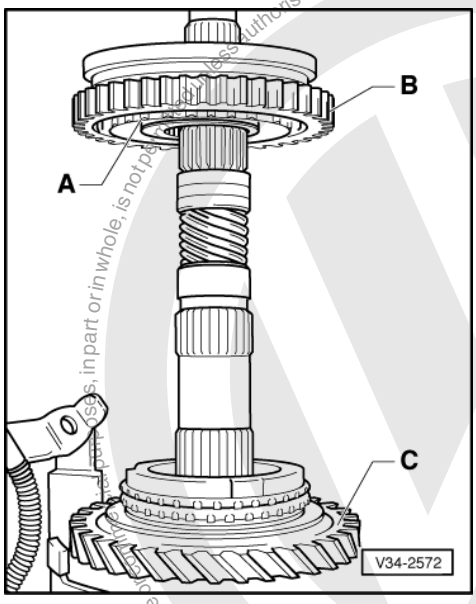

- Fit thrust washer, needle bearing, gear wheel and synchro-ring for 1st gear.
- -> Installation position of 1st/2nd gear locking collar/synchro-hub.

  The identification groove on face end -A- and the locking collar outer splines -B- face towards 1st gear sliding wheel -C-.

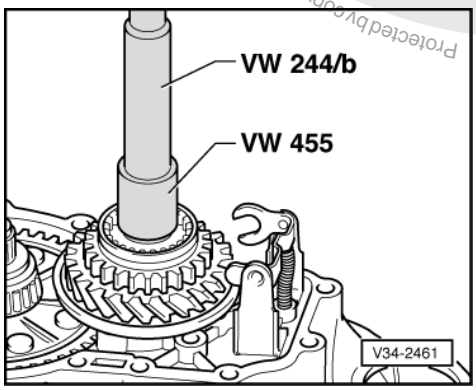

- -> Heat 1st/2nd gear locking collar/synchro-hub to approx. 100 °C, fit and drive onto stop.

  Turn synchro-ring so that the grooves align with the locking pieces.

- Install reverse gear, drive in shaft if necessary.

Protected by copyright. Copying for private or commercial purposes, in part or in whole, is not permitted unless authorised by Volkswagen AG. Volkswagen AG does not guarantee or accept any liability with respect to the correctness of information in this document. Copyright by Volkswagen AG.
satelettronica

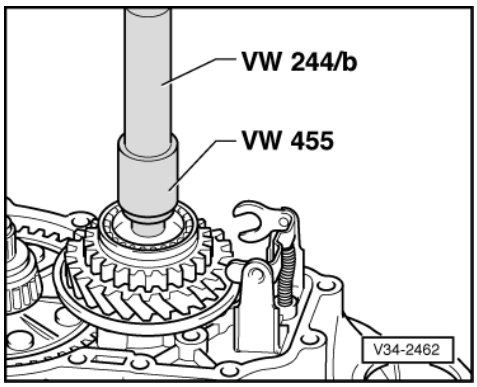

- -> Drive in inner race for 2nd gear sliding wheel needle roller bearing onto stop.

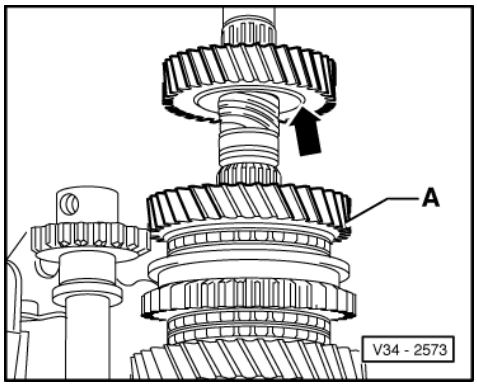

- Fit needle bearing, synchro-ring, sliding wheel for 2nd gear and 3rd gear wheel.

-> Installation position 3rd gear wheel

Collar (arrow) towards 2nd gear sliding wheel -A-

- Drive on 3rd gear wheel onto stop using special tool VW 244 b.

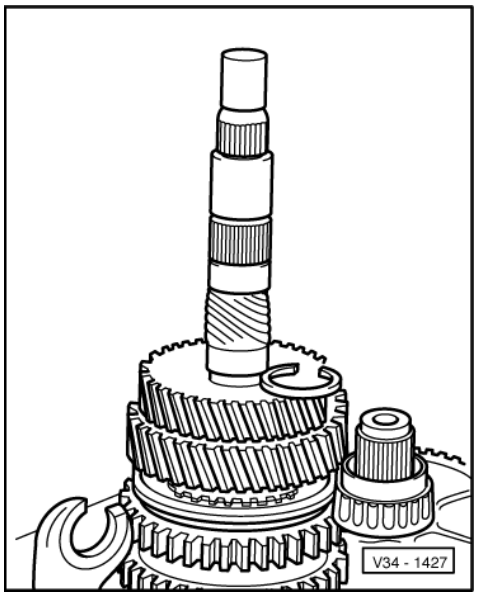

-> Adjust 3rd gear wheel axial play as follows:

- Determine thickest securing ring which can still just be inserted and install.

Protected by copyright. Copying for private or commercial purposes, part or in whole, is not permitted unless authorised by Volkswagen AG. Volkswagen AG does not guarantee or accept any liability with respect to the correctness of information in this document. Copyright by Volkswagen AG.
satelettronica

The following circlips (securing rings) are available:

Part No.	Thickness (mm)	Identification
020 311 381	2.5	Brown
020 311 381 A	2.6	Black
020 311 381 B	2.7	Polished
020 311 381 C	2.8	Copper
020 311 381 D	2.9	Brass
020 311 381 E	3.0	Blue

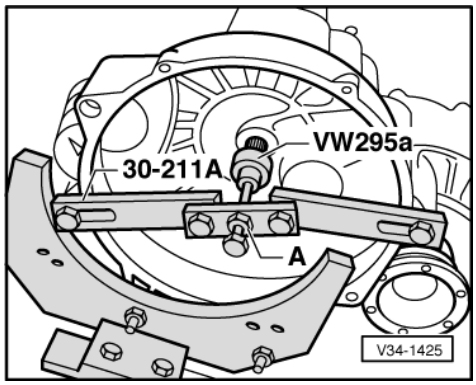

- -> Assemble support bridge 30-211 A for input shaft.

Note:

In cases where input shaft has not been dismantled:

Press off input shaft grooved ball bearing => Page 123 item 10

- Fit complete input shaft but without grooved ball bearing.
- Lift VW 295 onto stop on input shaft using screw and lock nut -A-.

  A - Lock nut M 12

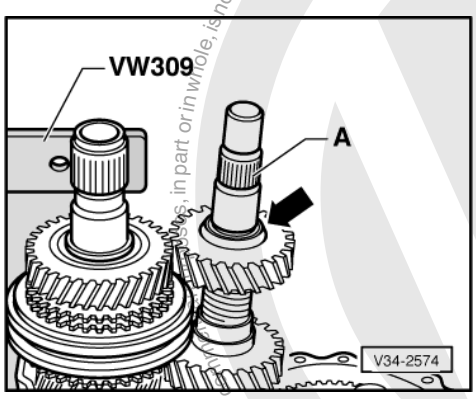

-> Installation position 4th gear wheel

Collar (arrow) towards 5th gear splines -A-.

- Fit 4th gear wheel on output shaft using tool 30-23 and secure with a circlip.

satelettronica
Protected by copyright. Copying for private or commercial purposes, in part or in whole, is not permitted unless authorised by Volkswagen AG. Volkswagen AG does not guarantee or accept any liability with respect to the correctness of information in this document. Copyright by Volkswagen AG.

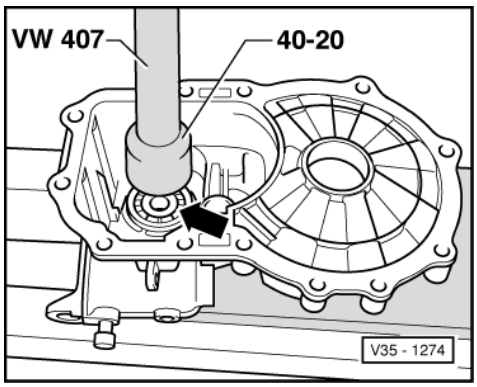

- -> Press on input shaft grooved ball bearing.

Installation position:

Inner race wider collar (arrow) towards insertion tools.

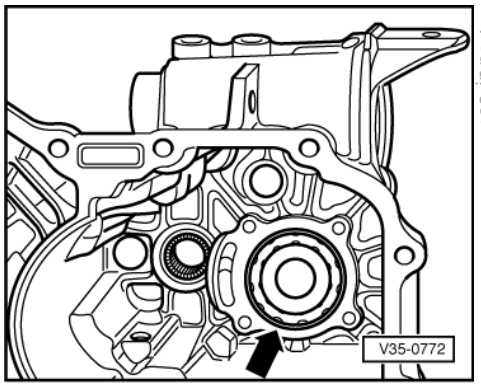

- -> Tighten tensioning plate (arrow) securely.

Note:

Tensioning plate fits only in one position.

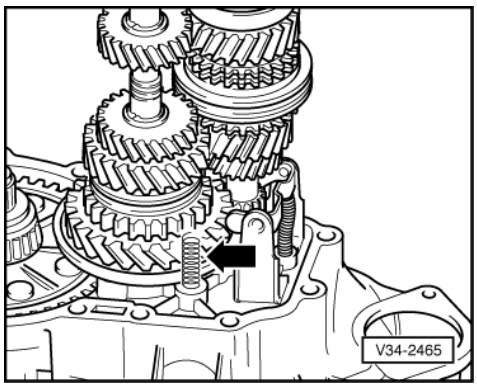

- -> Insert lower spring (arrow) for selector rod into clutch housing.

Protected by copyright. Copying for private or commercial purposes, in part or in whole, is not permitted unless authorised by Volkswagen AG. Volkswagen AG does not guarantee or accept any liability with respect to the correctness of information in this document. Copyright by Volkswagen AG.
satelettronica

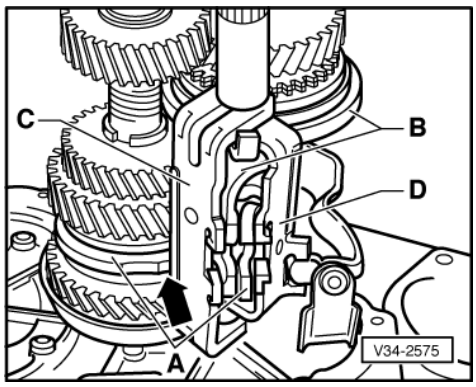

- -> Install selector fork set and align selector jaw.

  A - 1st/2nd gear selector fork
  Arrow faces towards recess for selector bridge -C-
  B - 3rd/4th gear selector fork
  C - Selector bridge with 5th gear selector tube
  D - Reverse gear selector fork

- Insert selector rods

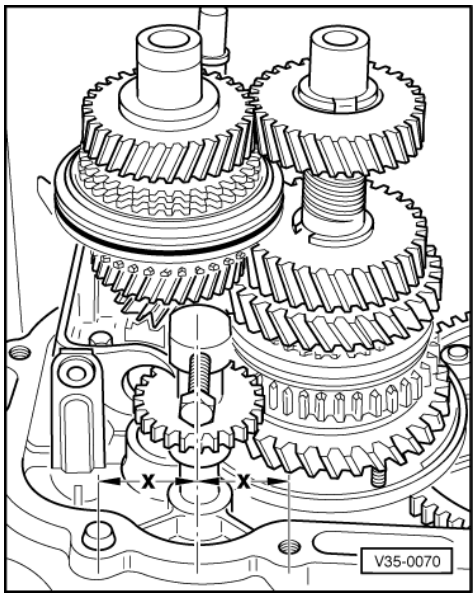

- -> Align reverse gear wheel shaft.
  Distance x identical.

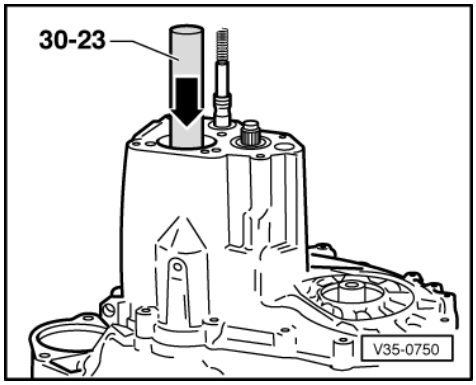

- -> Drive on gearbox housing.
- Secure reverse gear wheel shaft.
- Tighten bolts for securing gearbox housing to 25 Nm.
- Retighten tensioning plate countersunk screws for grooved ball bearing to 15 Nm.

Protected by copyright. Copying for private or commercial purposes, in part or in whole, is not permitted unless authorised by Volkswagen AG. Volkswagen AG does not guarantee or accept any liability with respect to the correctness of information in this document. Copyright by Volkswagen AG.
satelitnica

- Drive-on 5th gear wheel.

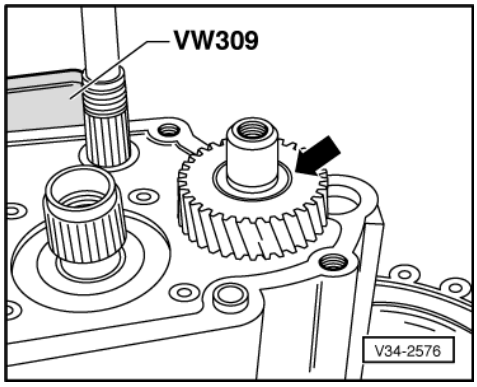

-> Installation position:

Groove (arrow) faces up.

- Install thrust washer and securing ring.

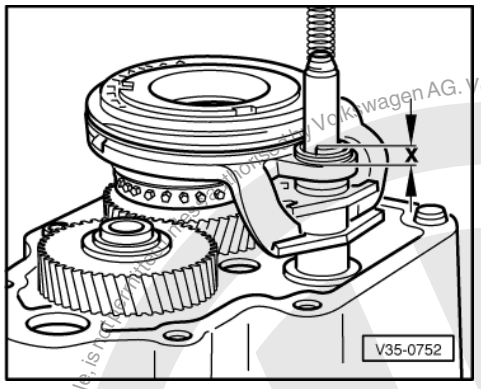

- Fit 5th gear synchro-hub complete with locking collar, 5th gear sliding wheel and selector fork and new securing plate.
- Use box spanner 3059 to screw selector tube clockwise into selector fork.
- -> Unscrew selector tube until it projects x = 5.0 mm.

Note:

Do not pull selector rod out of the selector tube (may happen if box spanner is tilted) otherwise the selector forks in the gearbox will fall apart and the gearbox will have to be disassembled. Hold selector rod down, if necessary, with a screwdriver inserted through the side slot when taking box spanner off.

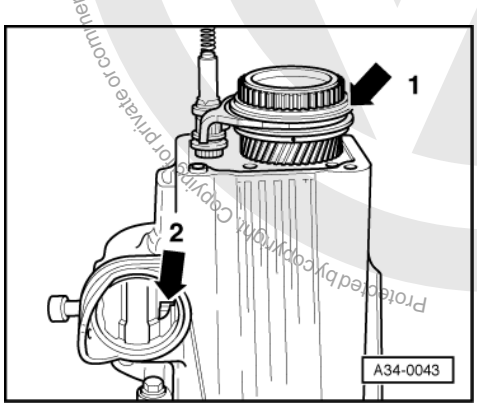

- Coat new bolt for synchro-hub with locking fluid D 000 600 A2 and fit.
- -> Select 5th gear (arrow 1).
- Select reverse gear (arrow 2) (forward selector jaw facing downwards).

Protected by copyright. Copying for private or commercial purposes, in part or in whole, is not permitted unless authorised by Volkswagen AG. Volkswagen AG does not guarantee or accept any liability with respect to the correctness of information in this document. Copyright by Volkswagen AG.
satelettronica

- Tighten synchro-hub bolt with a 12 mm multi-point key.

- Move selector forks to neutral position.

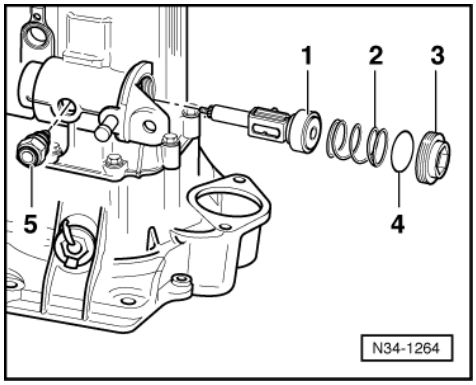

- -> Insert selector shaft -1-.
- Insert spring -2- for selector shaft and tighten sealing cover -3-.

Note:

If the sealing cover was sealed with a sealing ring -4-, then this sealing ring must be replaced.

- Insert locking bolt -5- for selector shaft.

Adjust 5th gear selector fork as follows:

• Perform adjustment with great care so that the possibility of "gears jumping out" is eliminated.

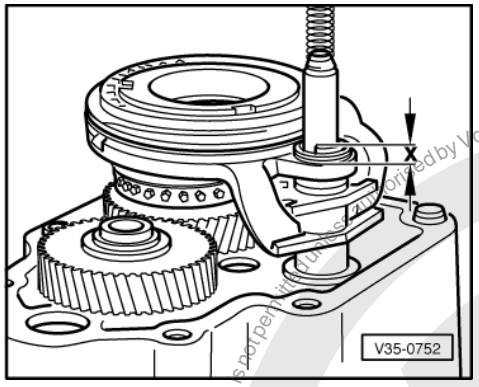

- -> Check projection of selector tube - dimension "x" = 5.0 mm adjust with box spanner 3059, if necessary.
- Bolt selector shaft lever to the selector shaft and engage 5th gear (pull selector shaft fully out and turn to the left).

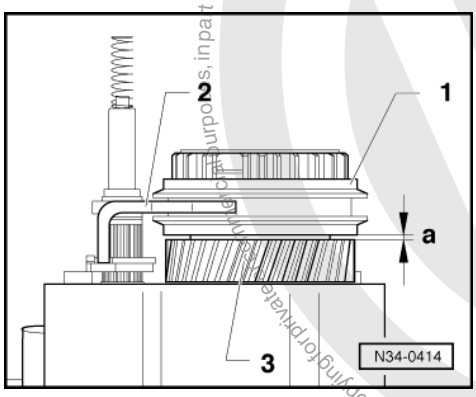

- -> Align locking collar -1- with selector fork -2- so there is no free play to 5th gear selector wheel -3-.

Protected by copyright. Copying for private or commercial purposes, in part or in whole, is not permitted unless authorized by Volkswagen AG. Volkswagen AG does not guarantee or accept any liability with respect to the correctness of information in this document. Copyright by Volkswagen AG.
satelettronica

- Check measurement:
  The dimension "a" = 1.3 mm must exist between locking collar and sliding wheel. Correct dimension, if necessary by turning the selector tube.

- Disengage 5th gear. Locking collar must now be in the neutral position. Synchro-ring must move freely.

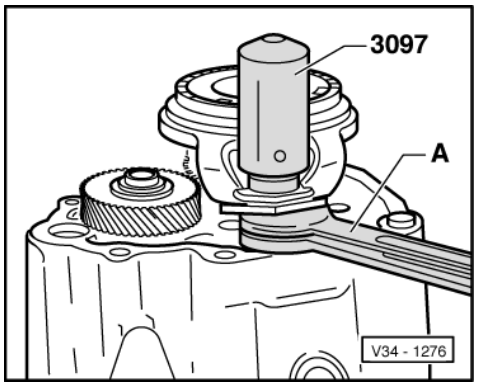

- -> Drive on new locking plate.

  Use tools about 12 mm thick to support selector fork e.g. two open jaw spanners (flat) -A- (19 mm and 24 mm).

- Select all gears.

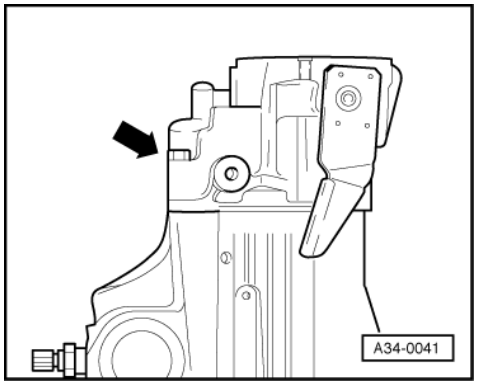

- -> Fit gearbox housing cover (arrow) (Qty. 6 bolts).

Note:

One of the 6 bolts is located inside the cover

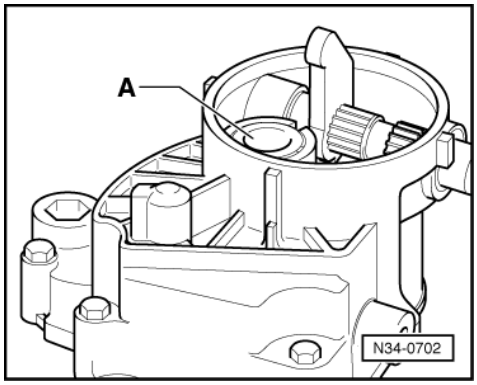

- -> Then insert release bearing -A- into gearbox housing cover.

Protected by copyright. Copying for private or commercial purposes, in part or in whole, is not permitted unless authorised by Volkswagen AG. Volkswagen AG does not guarantee or accept any liability with respect to the correctness of information in this document. Copyright by Volkswagen AG.
satelettronica

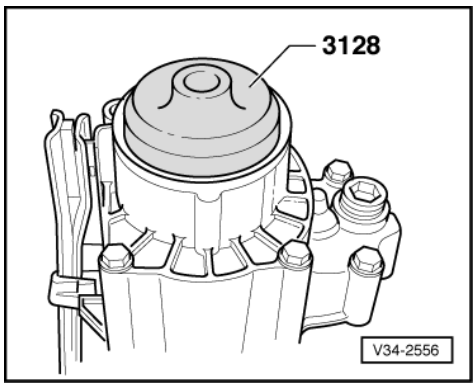

- -> Drive on sealing cap.

Note:

Sealing surface on gearbox housing cover must be free of grease.

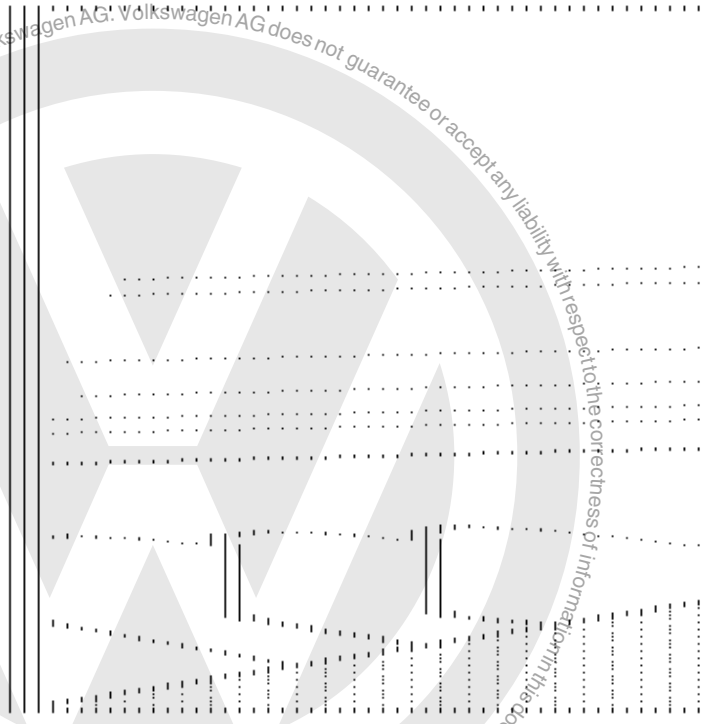

- -> Install flange shafts along with springs, thrust washers and tapered rings.
- Install reversing light switch and speedometer drive.

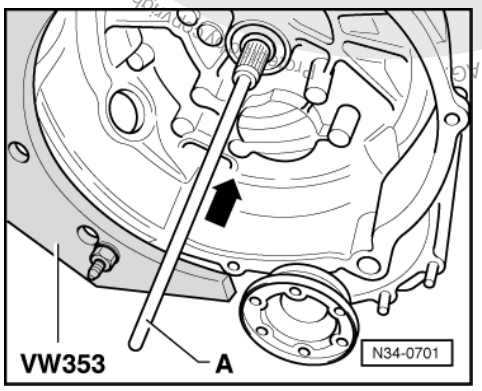

Copyright by Volkswagen AG. Volkswagen AG does not guarantee or accept any liability with respect to the correctness of information in this document. Copyright by Volkswagen AG. Copying for private or commercial purposes, in part or in whole, is not permitted unless authorised by Volkswagen AG.
satelettronica

- Remove support bridge 30-211 A for input shaft.
- -> Guide clutch push rod -A- into input shaft

5 - Servicing gearbox housing and selector shaft

5.1 - Servicing gearbox housing and selector shaft

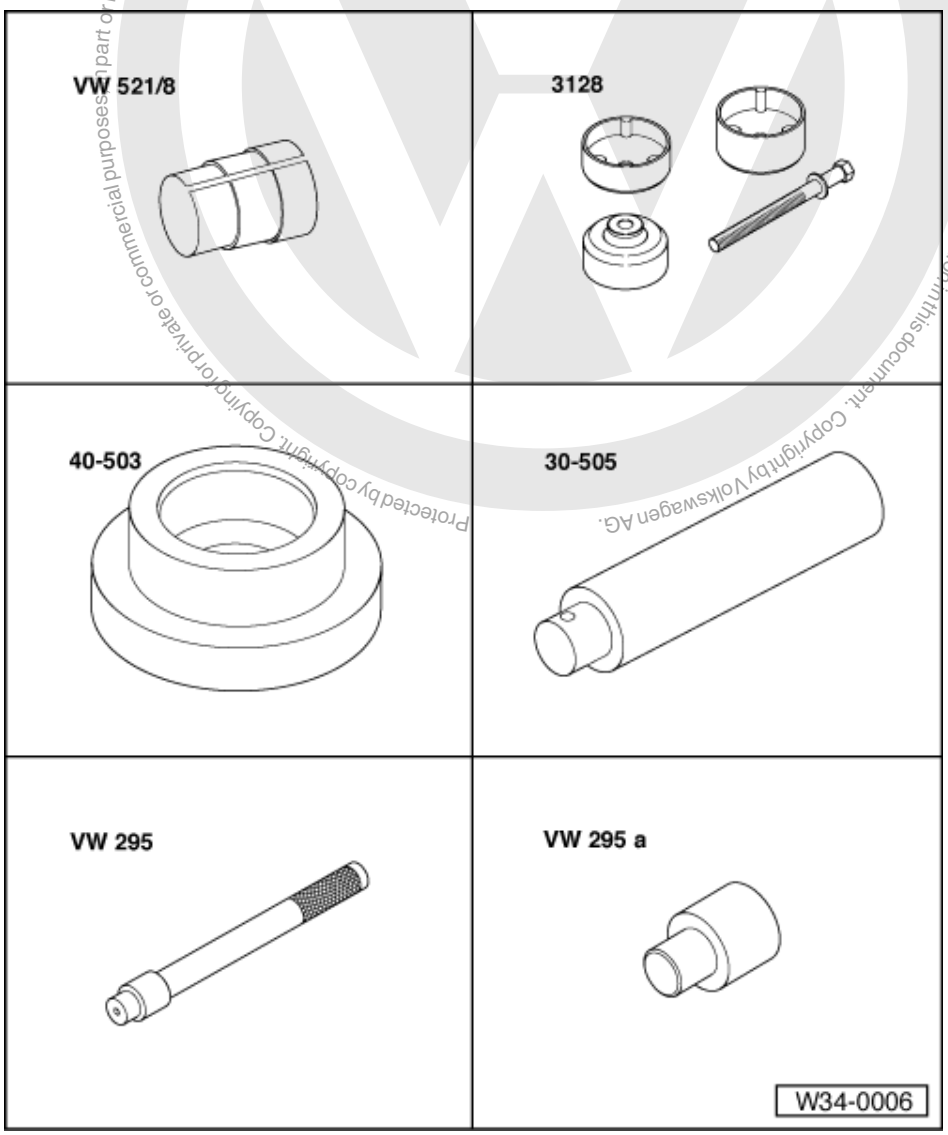

Special tools and workshop equipment required

- VW 521/8 Adjusting device
- 3128 Puller
- 40-503 Press tool
- 30-505 Mandrel
- VW 295 Drift
- VW 295a Adapter

Protected by copyright. Copyright by Volkswagen AG.
Copying for private or commercial purposes, in part or in whole, is not permitted unless authorised by Volkswagen AG. Volkswagen AG does not guarantee or accept any liability with respect to the correctness of information in this document.
satelettronica

Special tools and workshop equipment required

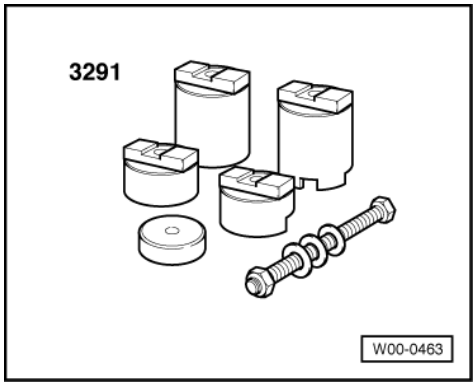

- 3291 Spindle from assembly tool

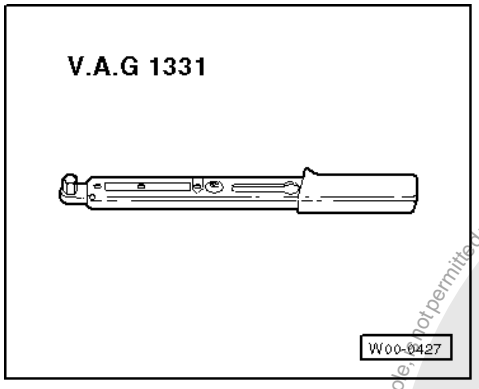

- V.A.G 1331 Torque wrench

Protected by copyright. Copying for private or commercial purposes, in part or in whole, is not permitted unless authorised by Volkswagen AG. Volkswagen AG does not guarantee or accept any liability with respect to the correctness of information in this document. Copyright by Volkswagen AG.
satelettronica

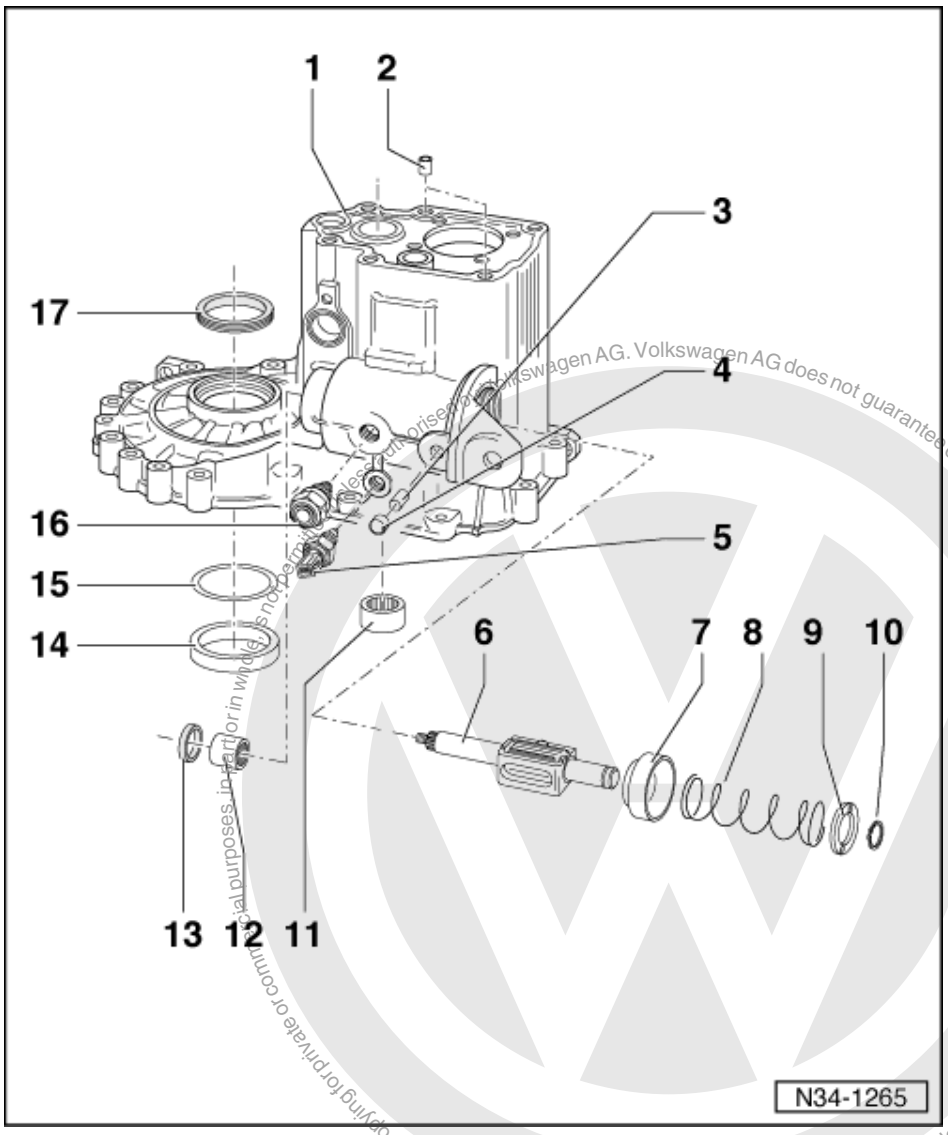

1 Gearbox housing
- If replaced: Adjust differential => Page 162

2 Dowel sleeve
- (Qty. 2)

3 Sleeve
- Remove using pliers
- Knock-in onto stop

4 Cap
- For gearbox breather

5 Reversing light switch, 25 Nm

6 Selector shaft
- Removing and installing
  => Fig. 1

Protected by copyright. Copying for private or commercial purposes, in part or in whole, is not permitted unless authorised by Volkswagen AG. Volkswagen AG does not guarantee or accept any liability with respect to the correctness of information in this document. Copyright by Volkswagen AG.
satelettronica

Protected by copyright. Copyright by Volkswagen AG. Volkswagen AG does not guarantee or accept any liability with respect to the correctness of information in this document. Copying for private or commercial purposes, in part or in whole, is not permitted unless authorised by Volkswagen AG.

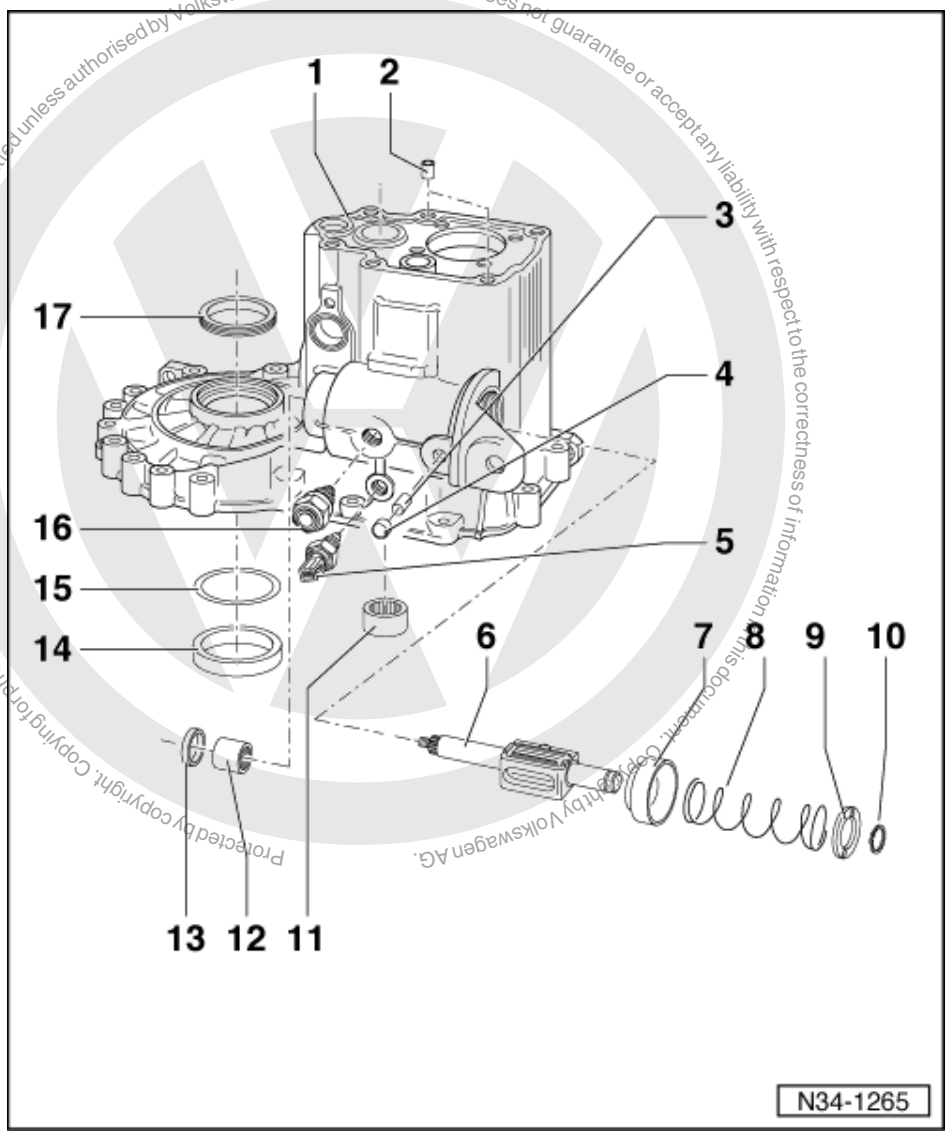

7 Stop cap

8 Spring

9 Retaining plate

- Hold retaining plate tight when releasing securing ring (item 10). Then carefully relieve spring tension (item 8).

10 Securing ring

- Always renew

11 Needle roller bearing

- For output shaft
- Removing => Fig. 6
- Installing => Fig.7

12 Ball sleeve

- For selector shaft
- Pulling out => Fig. 4
- Pressing in => Fig. 5

satelettronica

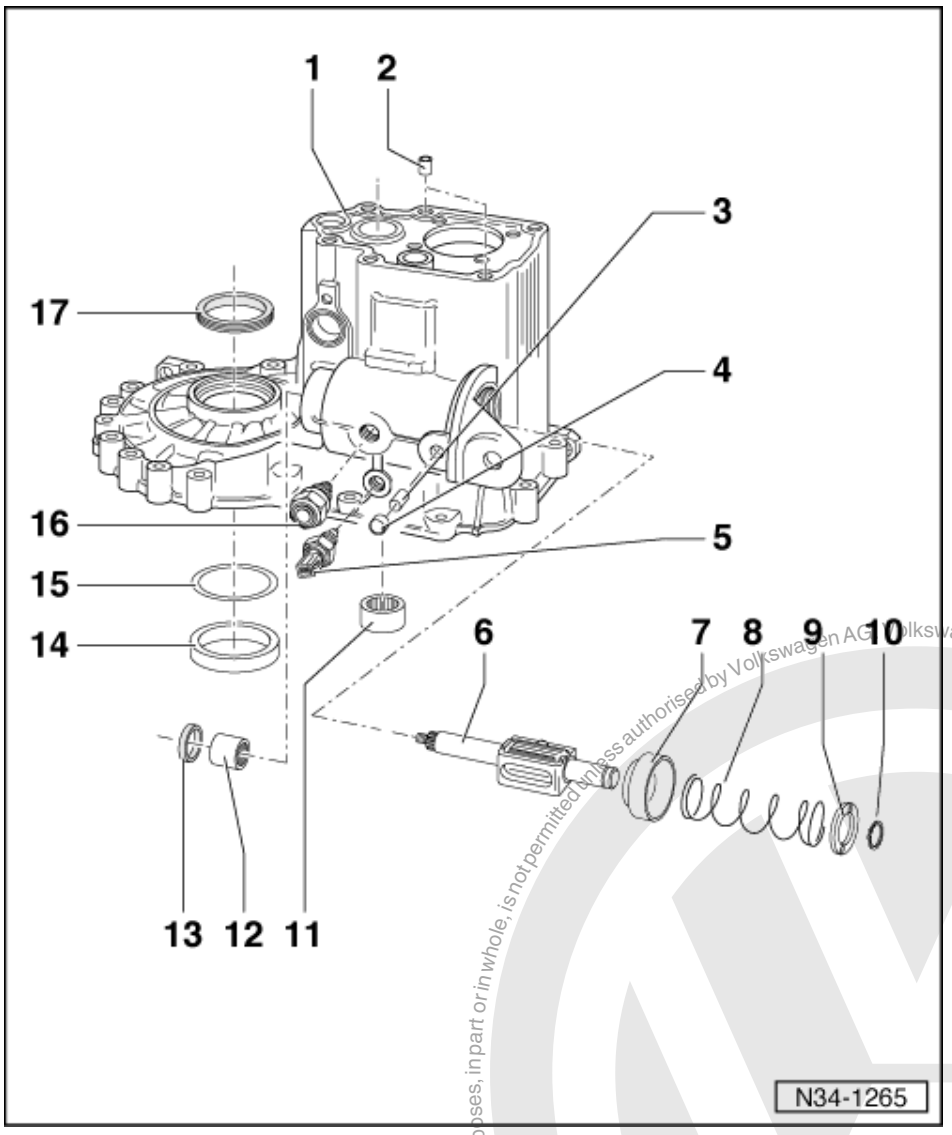

13 Oil seal
- For selector shaft
- Can be renewed with gearbox installed
- Removing => Fig. 2
- Pulling in => Fig. 3

14 Outer race/taper roller bearing
- For differential
- Driving in and out
  => from page 150
- If replaced: Adjust differential
  => Page 162

15 Shim S1
- Adjustment overview
  => Page 161

16 Selector shaft locking bolt, 40 Nm

17 Flange shaft oil seal
- Renewing => Page 147

Protected by copyright. Copying for private or commercial purposes, in part or in whole, is not permitted unless authorised by Volkswagen AG. Volkswagen AG does not guarantee or accept any liability with respect to the correctness of information in this document. Copyright by Volkswagen AG.
satelettronica

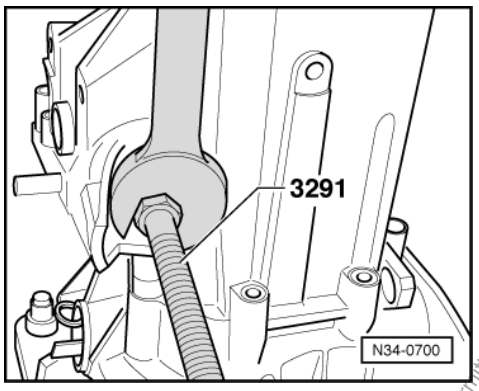

-> Fig.1 Removing selector shaft

- Unscrew selector shaft sealing cover and remove together with spring.
- Bring selector shaft to neutral and pull out from gearbox housing.

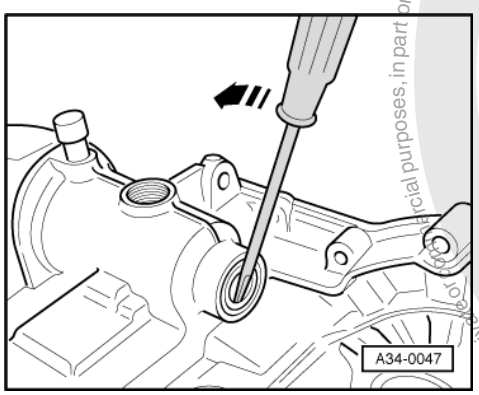

-> Fig.2 Removing selector shaft seal

- Lever out in direction of arrow with a screwdriver.

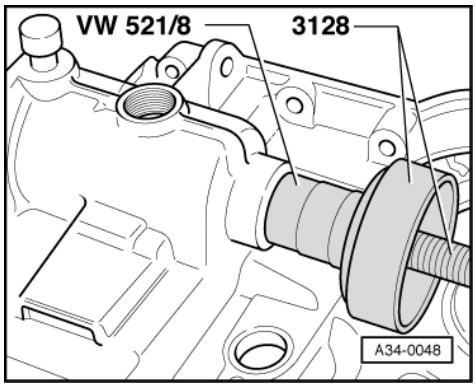

-> Fig.3 Pulling in selector shaft seal

- Pull in onto stop.
- Drive in with VW 521/8 when gearbox is removed.

Protected by copyright. Copying for private or commercial purposes, in part or in whole, is not permitted unless authorised by Volkswagen AG. Volkswagen AG does not guarantee or accept any liability with respect to the correctness of information in this document. Copyright by Volkswagen AG.
satelettronica

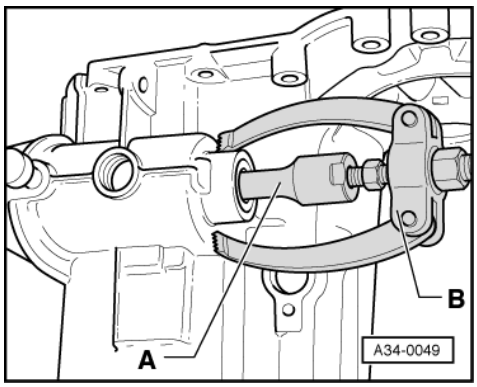

-> Fig.4 Removing selector shaft ball sleeve
A - Internal extractor 18 ... 23 mm, e.g. Kukko 21/3
B - Counter support. e.g. Kukko 22/1

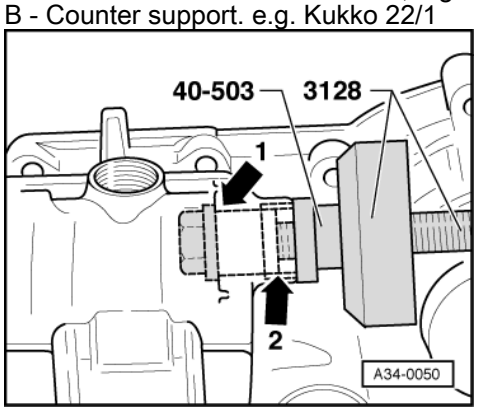

-> Fig.5 Pulling in selector shaft ball sleeve
- Pull in onto stop (arrow 1).

Installation position:
The ball sleeve projects out of the hole at the seal end (arrow 2).

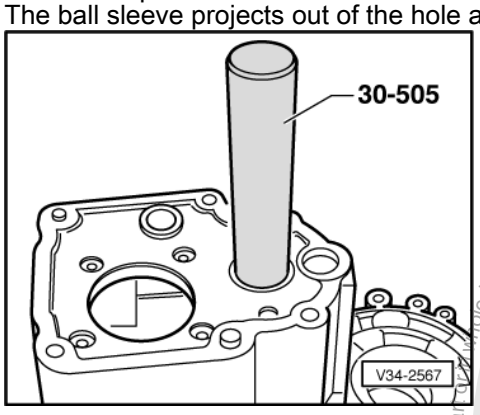

-> Fig.6 Driving-out needle bearing.

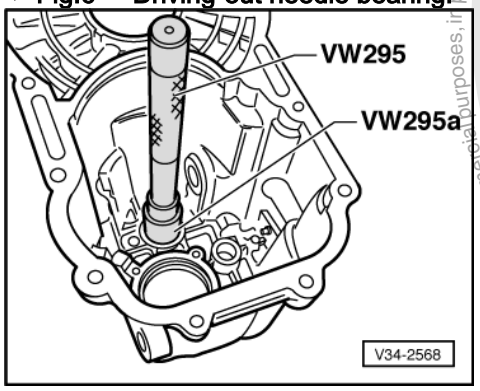

Protected by copyright. Copying for private or commercial purposes, in part or in whole, is not permitted unless authorised by Volkswagen AG. Volkswagen AG does not guarantee or accept any liability with respect to the correctness of information in this document. Copyright by Volkswagen AG.
satelettronica

-> Fig.7 Knocking needle roller bearing in onto stop

6 - Servicing clutch housing

6.1 - Servicing clutch housing

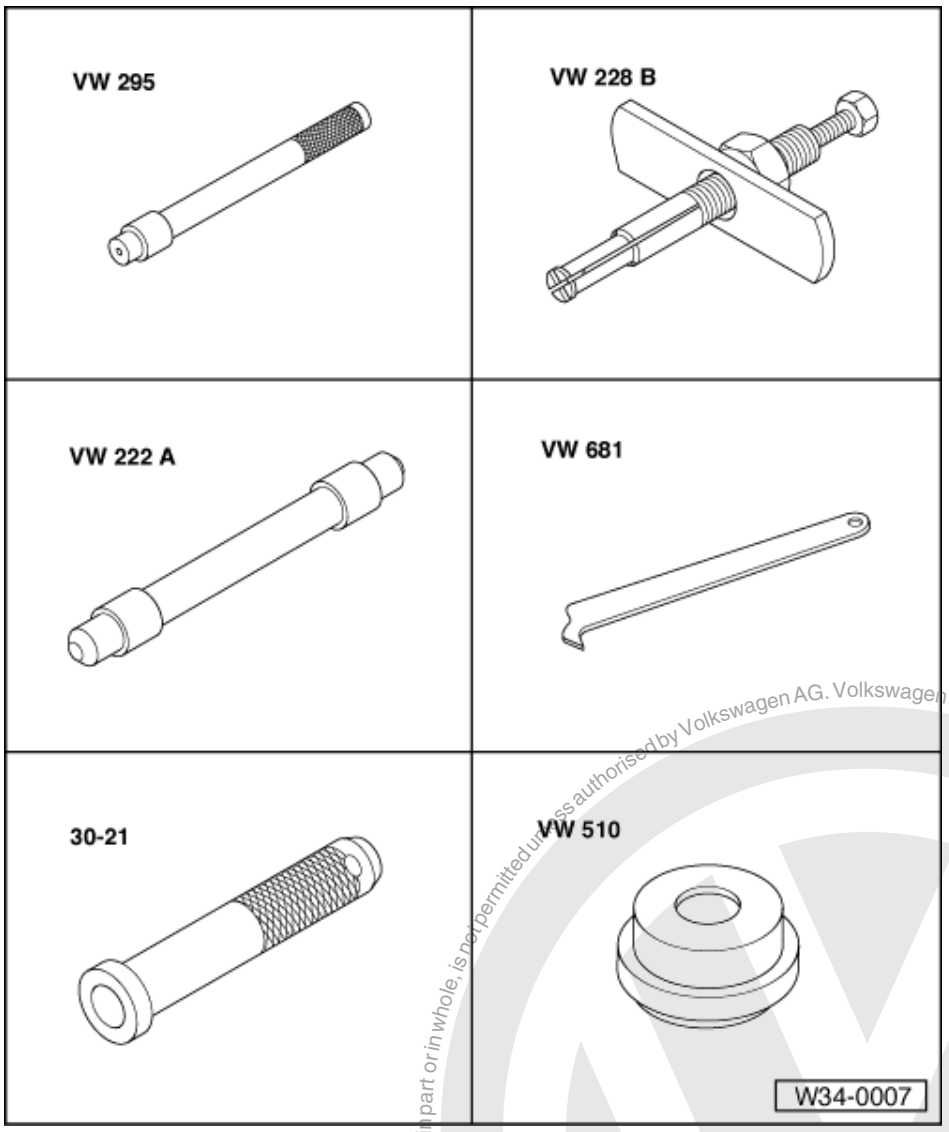

Special tools and workshop equipment required

- VW 295 Drift
- VW 228 B Puller
- VW 222 A Drift
- VW 681 Extractor
- 30-21 Sleeve
- VW 510 Press piece

Protected by copyright. Copying for private or commercial purposes, in part or in whole, is not permitted unless authorised by Volkswagen AG. Volkswagen AG does not guarantee or accept any liability with respect to the correctness of information in this document. Copyright by Volkswagen AG.
satelettronica

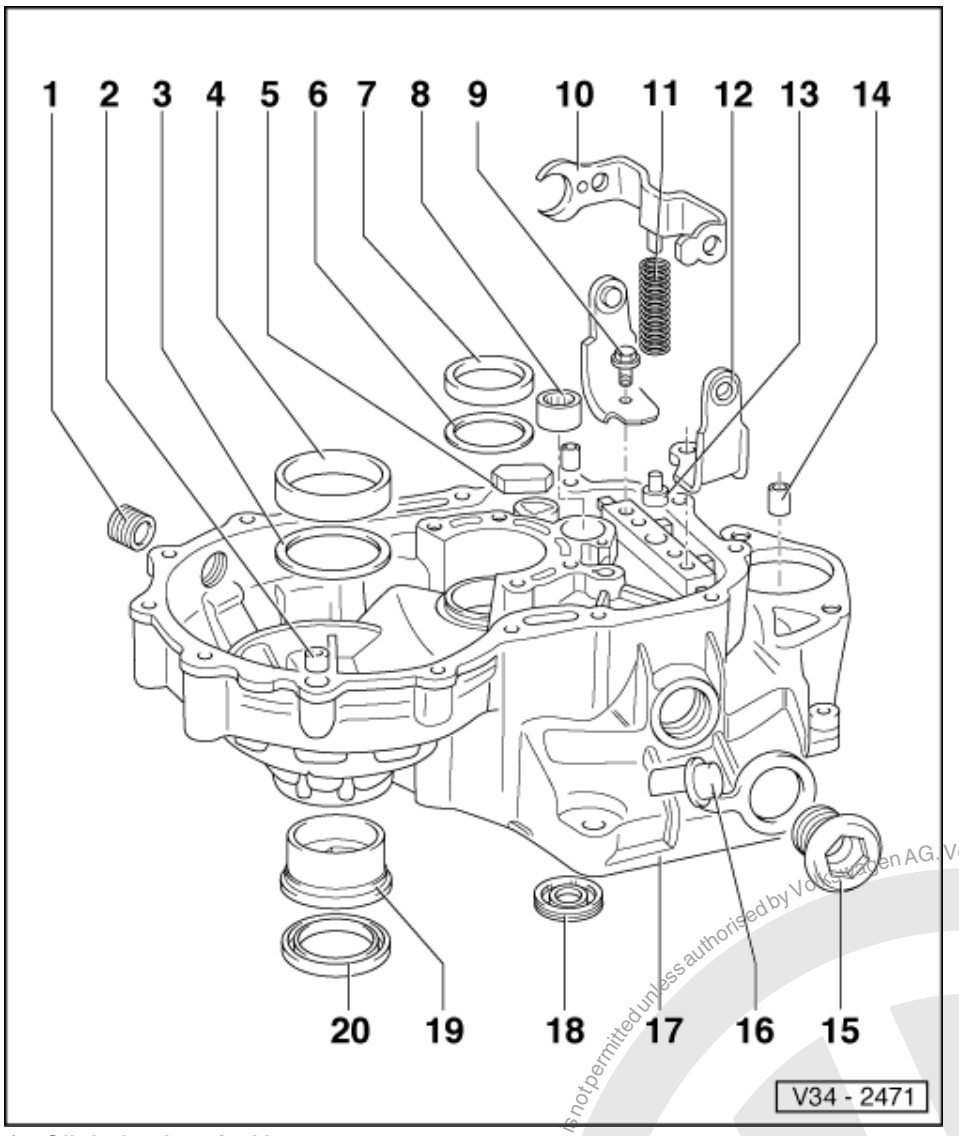

1 Oil drain plug, 25 Nm
- Without magnet

2 Dowel sleeve
- (Qty. 2)

3 Shim S2
- Always 1 mm thick

4 Outer race/taper roller bearing
- For differential
- Removing and installing
  => from Page 150
- If replaced: Adjust differential
  => Page 162

5 Magnet
- Held in place by housing joint surface
- Insert with sealant
  AMV 188 200 03

Protected by copyright. Copying for private or commercial purposes, in part or in whole, is not permitted unless authorised by Volkswagen AG. Volkswagen AG does not guarantee or accept any liability with respect to the correctness of information in this document. Copyright by Volkswagen AG.
satelettronica

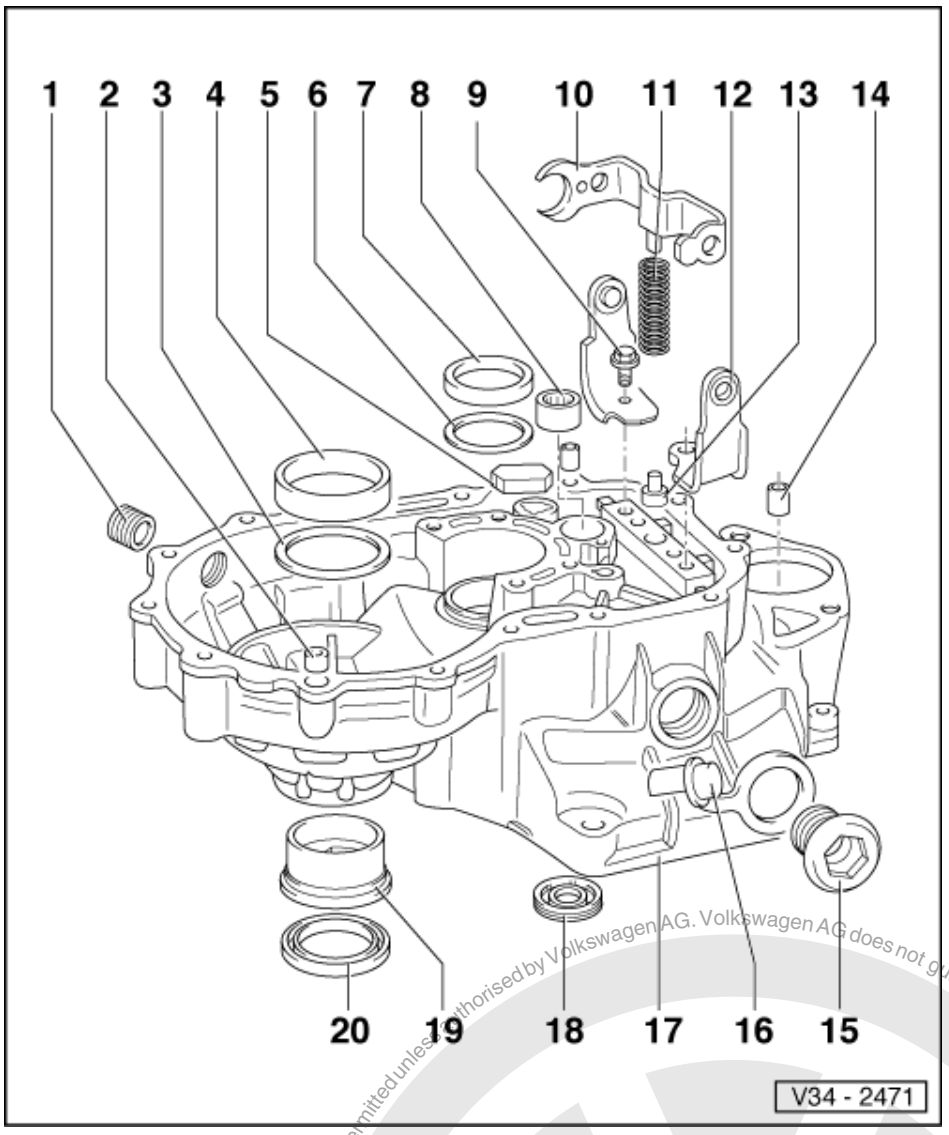

6 Shim
- For output shaft
- Adjustment overview
  => Page 161

7 Outer race/taper roller bearing
- For output shaft
- Driving in and out
  => from page 132
- If replaced: Adjust output shaft
  => Page 143

8 Needle roller bearing
- For input shaft
- Pulling out => Fig. 1
- Driving in => Fig. 2

9 Hexagon bolt, 25 Nm
- With locking flutes below bolt head

10 Reverse lever

11 Spring

satelettronica
Protected by copyright. Copying for private or commercial purposes, in part or in whole, is not permitted unless authorised by Volkswagen AG. Volkswagen AG does not guarantee or accept any liability with respect to the correctness of information in this document. Copyright by Volkswagen AG.

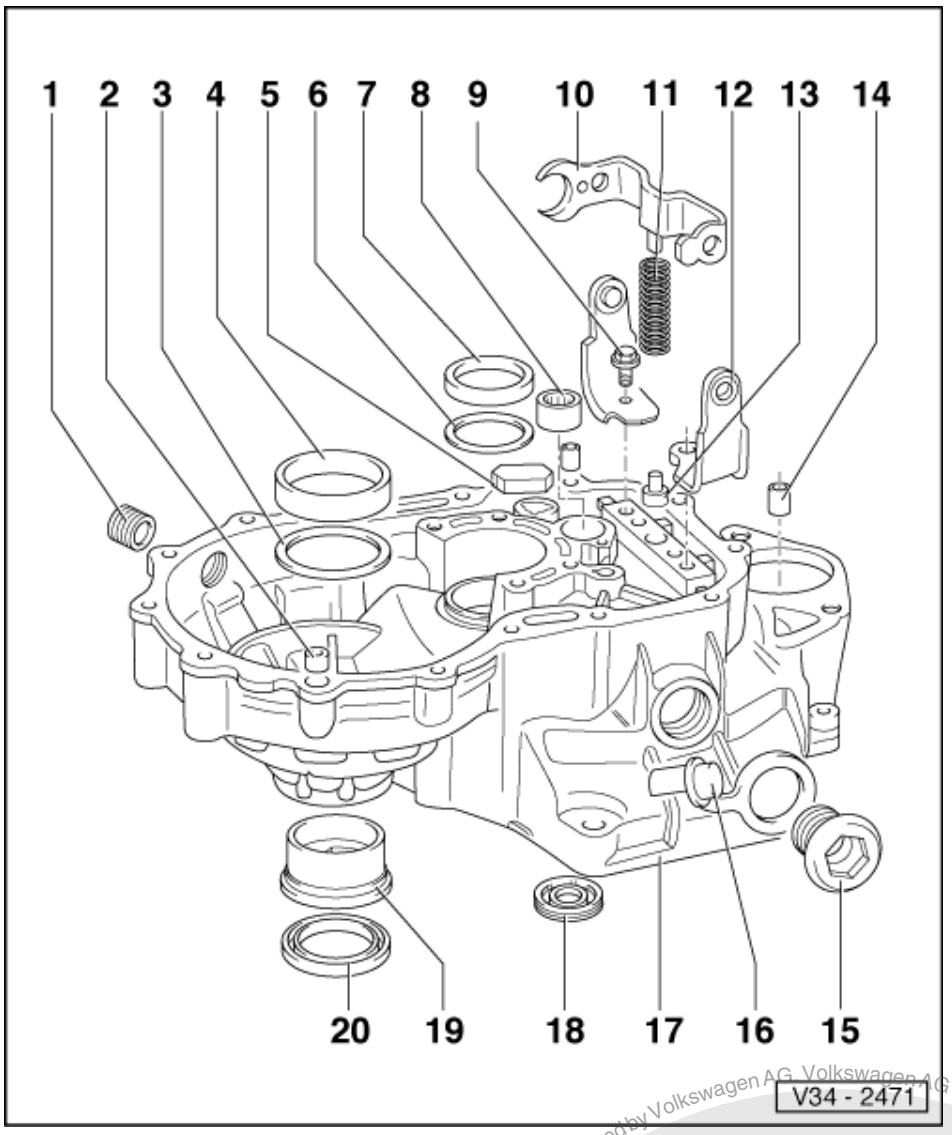

12 Reverse lever support
13 Sliding piece
14 Starter bush
- Pulling out => Fig. 3
- Driving in => Fig. 4
- Can be replaced without removing gearbox

15 Sealing plug
- Green - Clutch diameter 210 mm
- White - Clutch diameter 190 and 200 mm

Note:

It is important to allocate parts correctly e.g. when exchanging gearbox or rebuilding a clutch.

satelettronica
Protected by copyright. Copying for private or commercial purposes, in part or in whole, is not permitted unless authorised by Volkswagen AG. Volkswagen AG does not guarantee or accept any liability with respect to the correctness of information in this document. Copyright by Volkswagen AG.

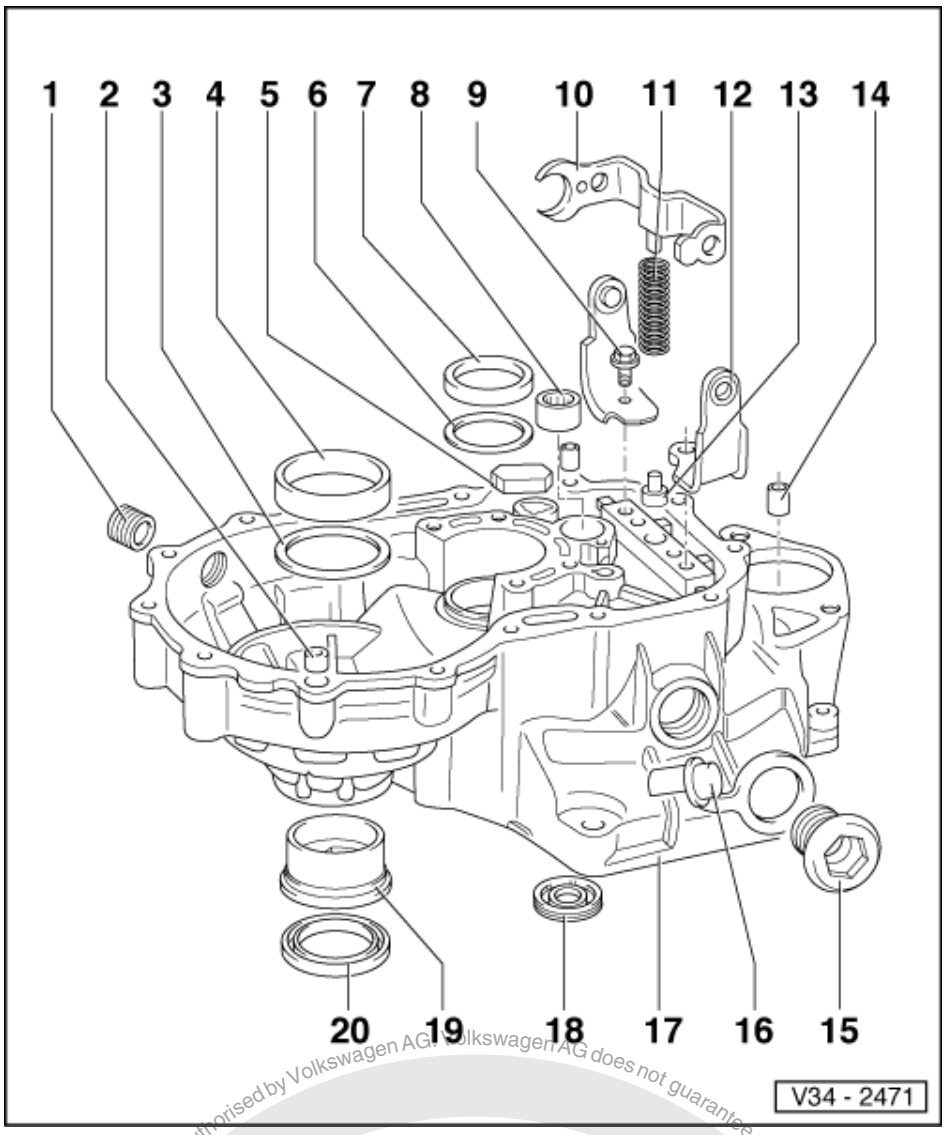

Consequences if incorrect sealing plug is installed:

1. White sealing plug -

   210 mm ø clutch

   - The TDC sensor is destroyed and the markings on the flywheel are damaged. Parts of TDC sensor lie in the clutch chamber.

2. Green sealing plug -

   190 and 200 mm ø clutch

   - Tester does not display a readout or readout is inaccurate or fluctuates.

16 Cap

17 Clutch housing

- If replaced: =>Adjustment overview, Page 161
- Different bolted eyelets depending on engine fitted => Page 63 , tightening torques

satelettronica
Protected by copyright. Copying for private and commercial purposes, in part or in whole, is not permitted unless authorised by Volkswagen AG. Volkswagen AG does not guarantee or accept any liability with respect to the correctness of information in this document. Copyright by Volkswagen AG.

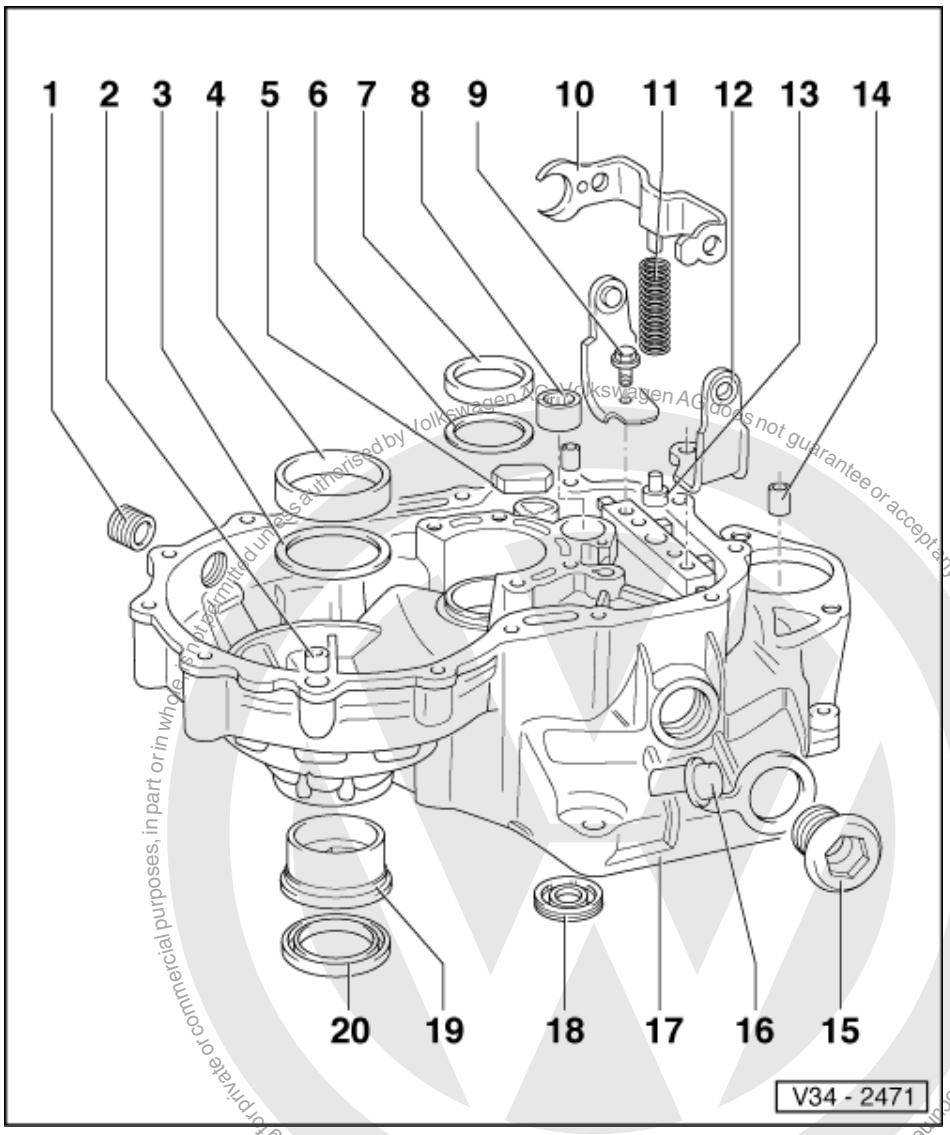

18 Input shaft oil seal

- Pulling out => Fig. 5
- Driving in => Fig. 6

19 Sleeve

- For oil seal (Item 20)
- Removing => Fig. 7
- Driving in => Fig.8

20 Drive flange seal

- Renewing => Page 147

Protected by copyright. Copying for private or commercial purposes, in part or in whole, is not permitted unless authorised by Volkswagen AG. Volkswagen AG does not guarantee or accept any liability with respect to the correctness of information in this document. Copyright by Volkswagen AG.
satelettronica

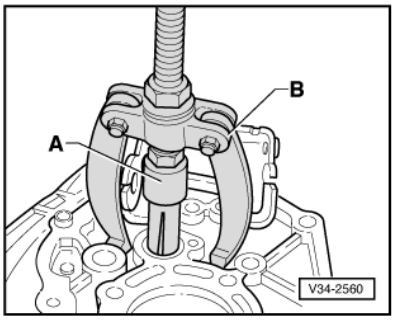

-> Fig.1 Pulling out input shaft needle bearing

A - Internal extractor, e.g. Kukko 21/3, 18.5 ... 23.5 mm

B - Counter support. e.g. Kukko 22/1

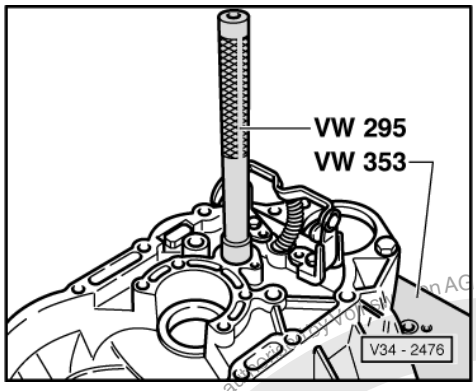

-> Fig.2 Driving in input shaft needle bearing

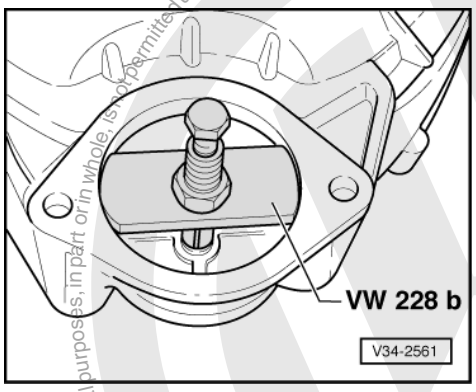

-> Fig.3 Pulling out starter bush.

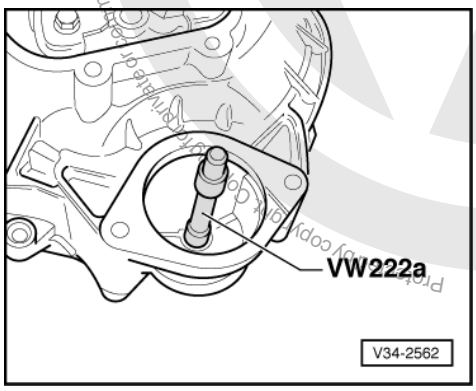

satelettronica
Volkswagen AG. Volkswagen AG does not guarantee or accept any liability with respect to the correctness of information in this document. Copyright by Volkswagen AG.
Photocopy copyright protected for internal purposes, in part or in whole, is not permitted unless authorized by Volkswagen AG.

-> Fig.4 Driving in starter bush.

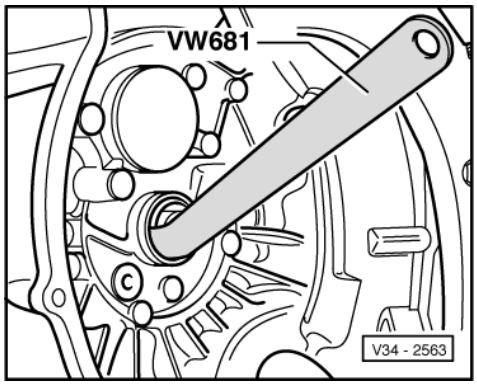

-> Fig.5 Pulling out output shaft oil seal.

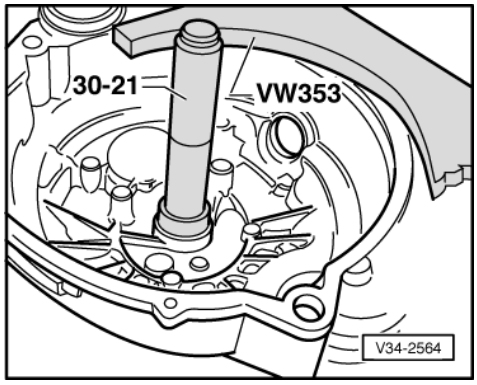

-> Fig.6 Driving in output shaft oil seal.

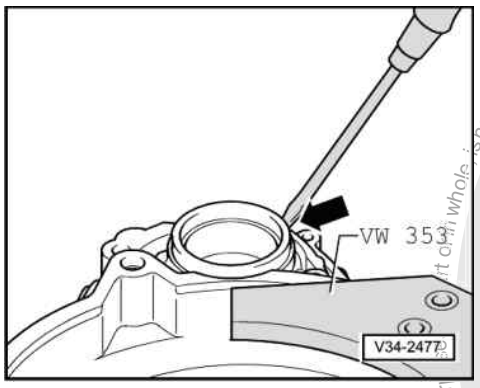

-> Fig.7 Lever out sleeve with screwdriver

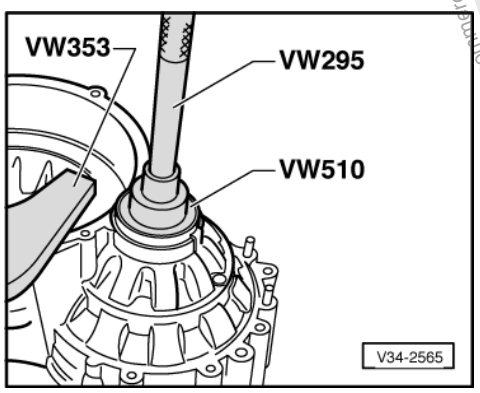

Protected by copyright. Copying for private or commercial purposes, in part or in whole, is not permitted unless authorised by Volkswagen AG. Volkswagen AG does not guarantee or accept any liability with respect to the correctness of information in this document. Copyright by Volkswagen AG.
satelettronica

-> Fig.8 Driving in sleeve

7 - Servicing gearbox housing cover

7.1 - Servicing gearbox housing cover

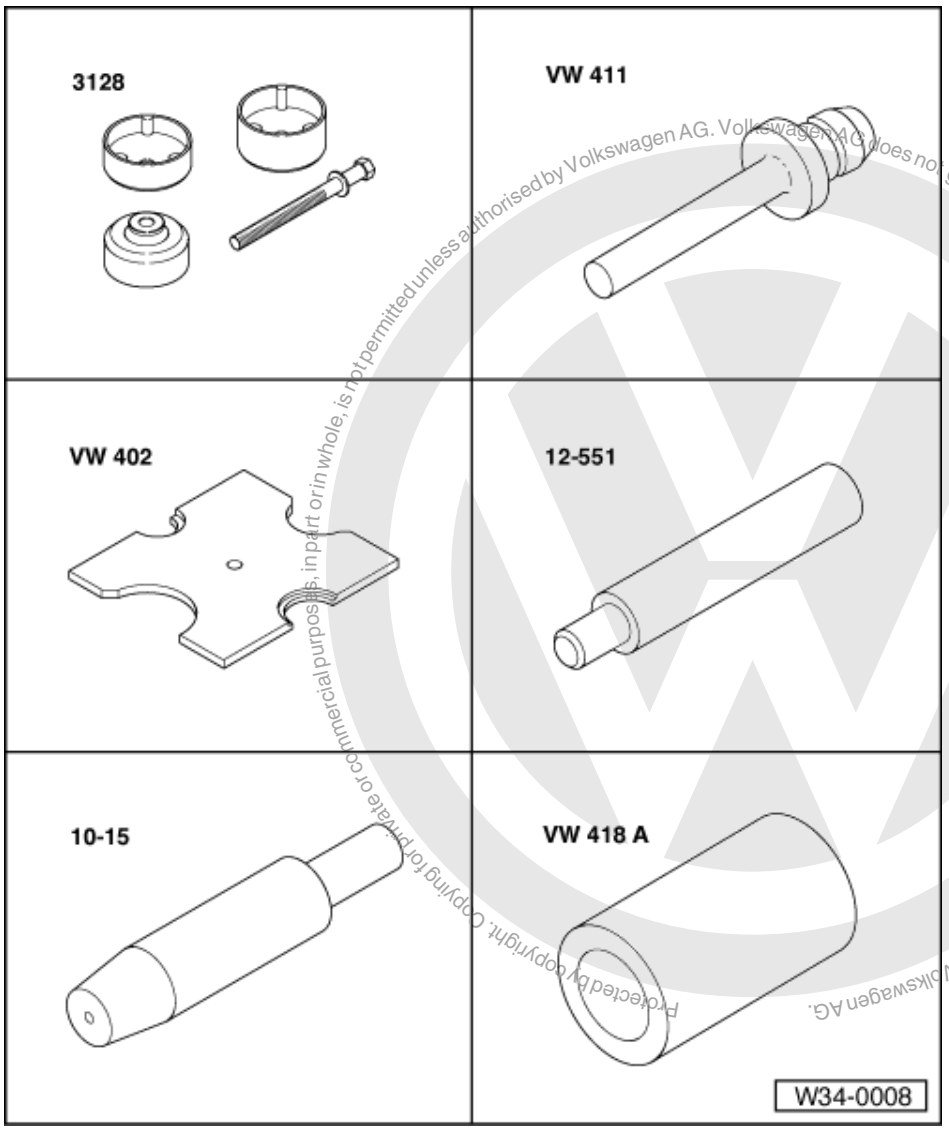

Protected by copyright. Copying for private or commercial purposes, in part or in whole, is not permitted unless authorised by Volkswagen AG. Volkswagen AG does not guarantee or accept any liability with respect to the correctness of information in this document. Copyright by Volkswagen AG.

satelettronica

Special tools and workshop equipment required

- 3128 Puller
- VW 411 Press tool
- VW 402 Thrust plate
- 12-551 Centring mandrel
- 10-15 Guide pin
- VW 418 A Tube

Special tools and workshop equipment required

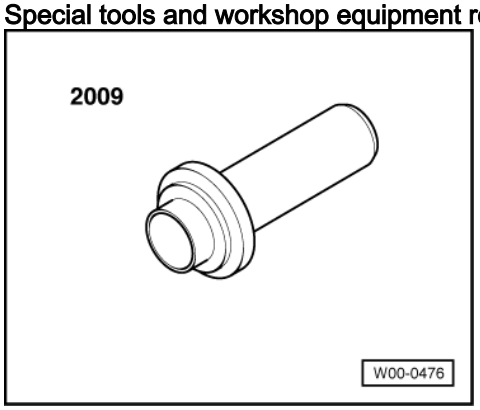

- 2009 Fitting sleeve
- V.A.G 1331 Torque wrench

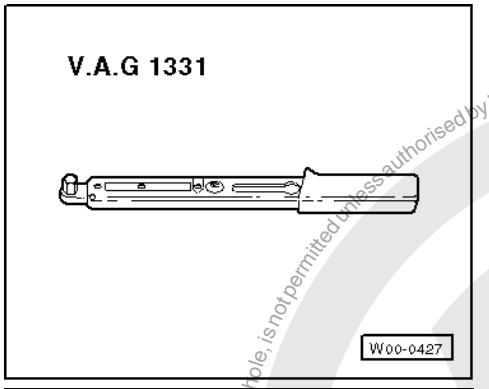

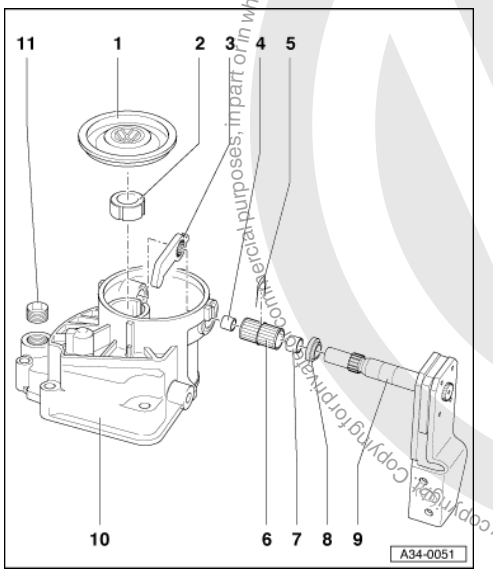

1 Sealing cap
- Renew
- Removing: Pierce and lever out
- Installing => Fig. 1

2 Release bearing
- Can be renewed with gearbox installed

3 Clutch lever
- Only fits in one position

4 Small mounting bush
- Pulling out => Fig. 4
- Pressing in => Fig. 5

Protected by copyright. Copying for private or commercial purposes, in part or in whole, is not permitted unless authorised by Volkswagen AG. Volkswagen AG does not guarantee or accept any liability with respect to the correctness of information in this document. Copyright by Volkswagen AG.
satelettronica

5 Securing clip

6 Needle roller bearing

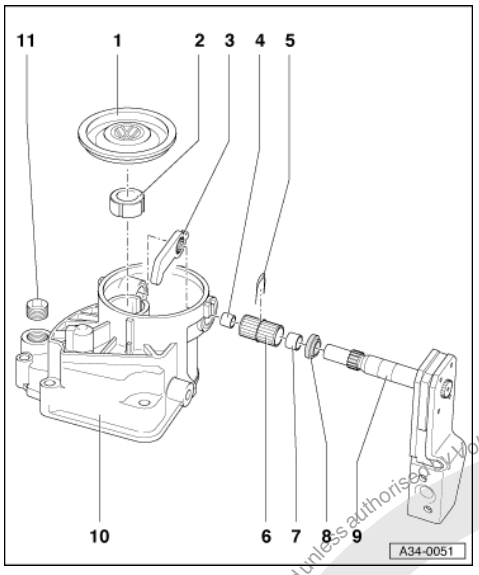

7 Large mounting bush
- Pressing out => Fig. 2
- Pressing in => Fig. 3

8 Oil seal
- Driving in => Fig. 6
- Can be renewed with gearbox installed. To renew, remove release shaft (item 9)

9 Release shaft
- Removing: Take off stop buffer sealing cap (item 1) and securing clip (item 5), pull out release shaft.

10 Gearbox housing cover
- Only version with mounting bushes (item 7 and 4) are available as a spare part

11 Oil filler plug, 25 Nm
- Without magnet

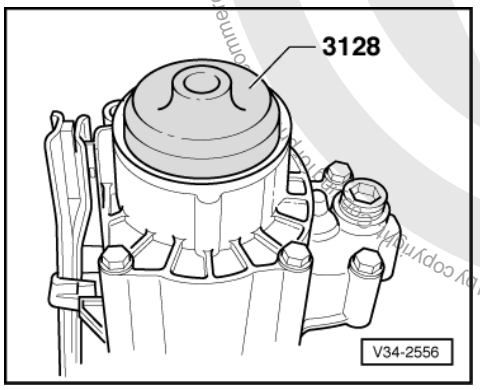

-> Fig.1 Installing sealing cap

Note:

Sealing surface on gearbox housing cover must be free of grease.

Protected by copyright. Copying for private or commercial purposes, in part or in whole, is not permitted unless authorised by Volkswagen AG. Volkswagen AG does not guarantee or accept any liability with respect to the correctness of information in this document. Copyright by Volkswagen AG.
satelettronica

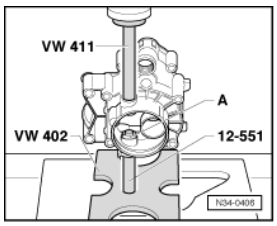

-> Fig.2 Pressing out large mounting bush -A-

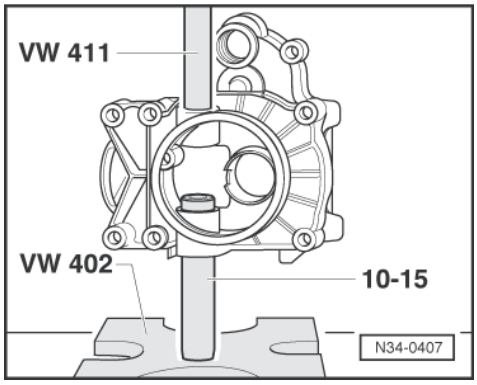

-> Fig.3 Pressing in large mounting bush

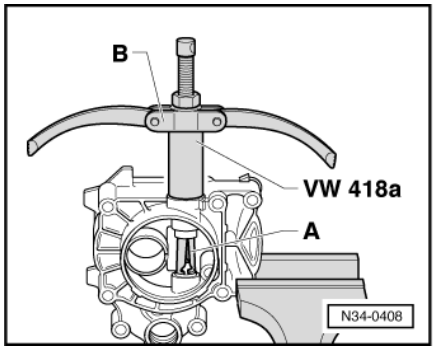

-> Fig.4 Pulling out small mounting bush

A - Internal extractor 10 ... 14 mm, e.g. Kukko 21/02

B - Counter support, e.g. Kukko 22/1

Note:

Mounting bush will be damaged when pulling out therefore always renew.

Protected by copyright. Copying for private or commercial purposes, in part or in whole, is not permitted unless authorised by Volkswagen AG. Volkswagen AG does not guarantee or accept any liability with respect to the correctness of information in this document. Copyright by Volkswagen AG.
satelettronica

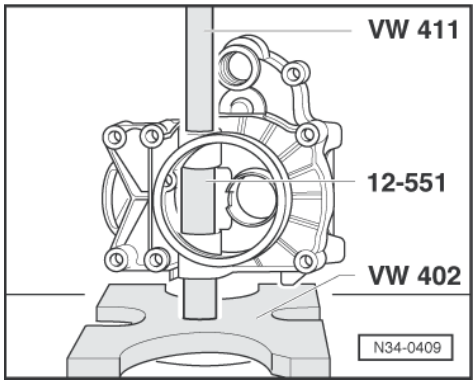

-> Fig.5 Pressing in small mounting bush

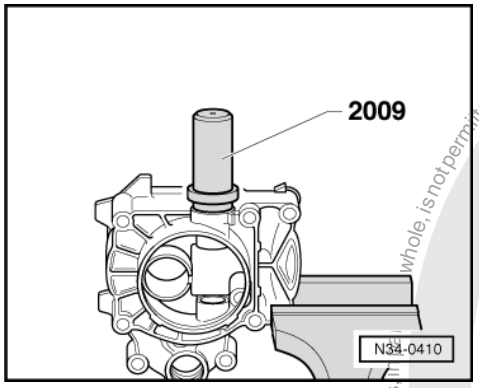

-> Fig.6 Driving in release shaft seal

- Clamp gearbox housing cover in vice using protective vice clamps.

Protected by copyright. Copying for private or commercial purposes, in whole, is not permitted unless authorised by Volkswagen AG. Volkswagen AG does not guarantee or accept any liability with respect to the correctness of information in this document. Copyright by Volkswagen AG.
satelettronica

35 - Gears, Shafts

1 - Dismantling and assembling input shaft

1.1 - Dismantling and assembling input shaft

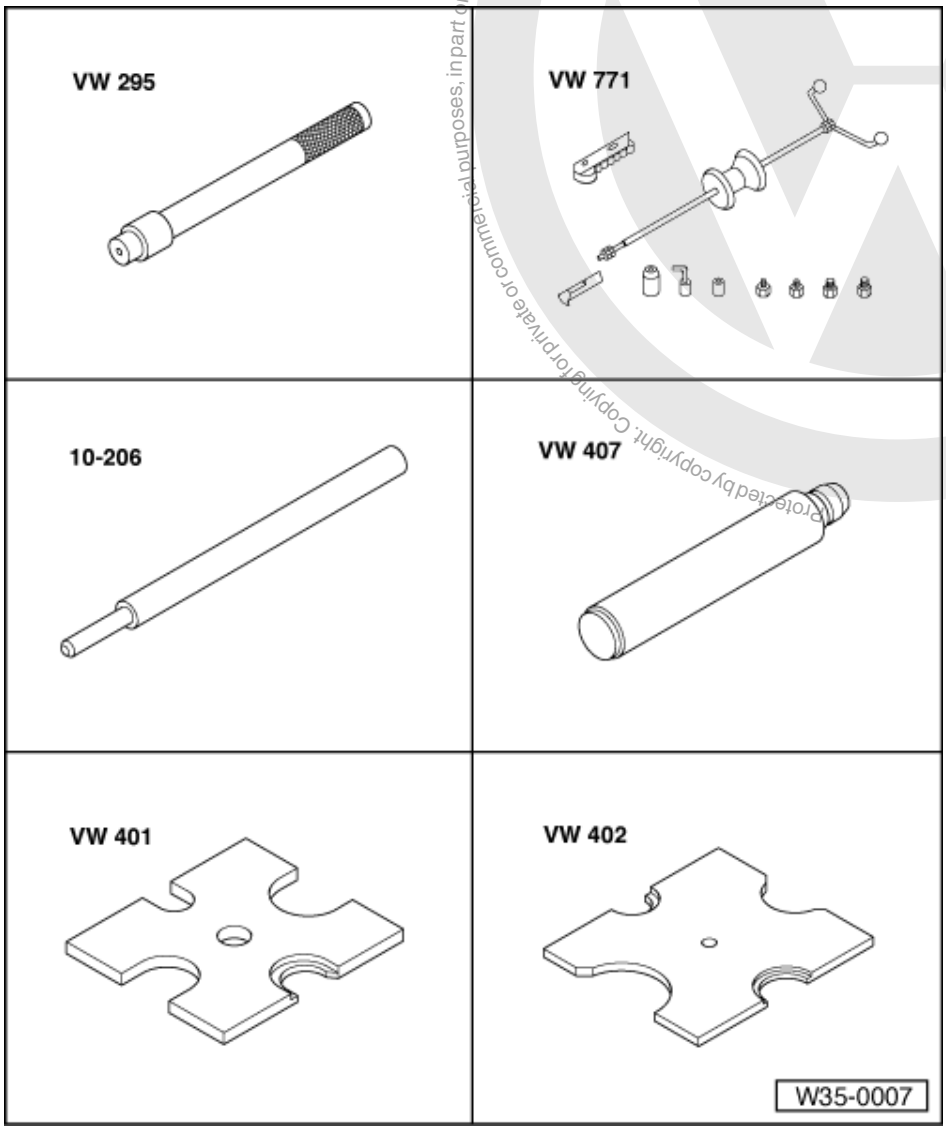

Special tools and workshop equipment required

- VW 295 Drift
- VW 771 Multi-purpose tool
- 10-206 Drift
- VW 407 Press tool
- VW 401 Thrust plate
- VW 402 Thrust plate

satelettronica

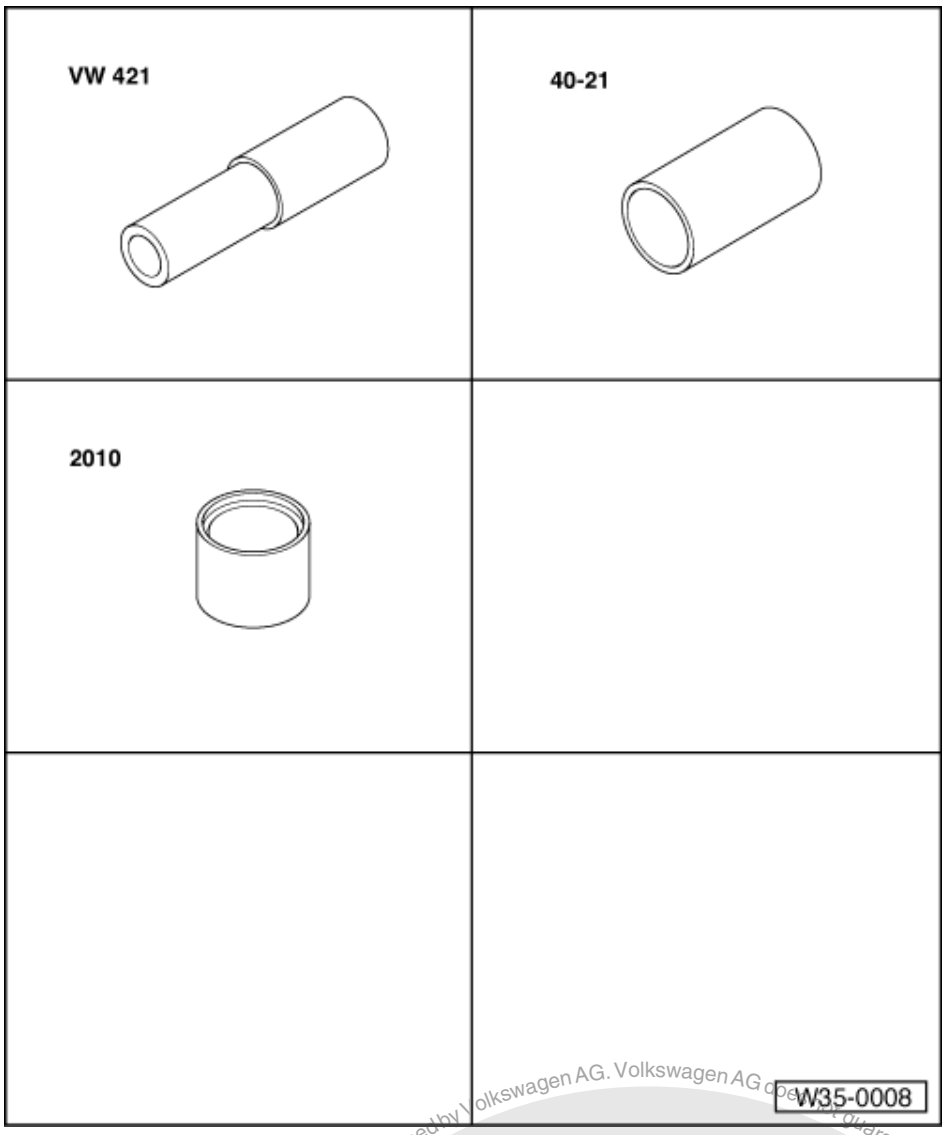

Special tools and workshop equipment required

- VW 421 Tube
- 40-21 Press tool
- 2010 Tube

Protected by copyright. Copying for private or commercial purposes, in part or in whole, is not permitted unless authorised by Volkswagen AG. Volkswagen AG does not guarantee or accept any liability with respect to the correctness of information in this document. Copyright by Volkswagen AG.

satelettronica

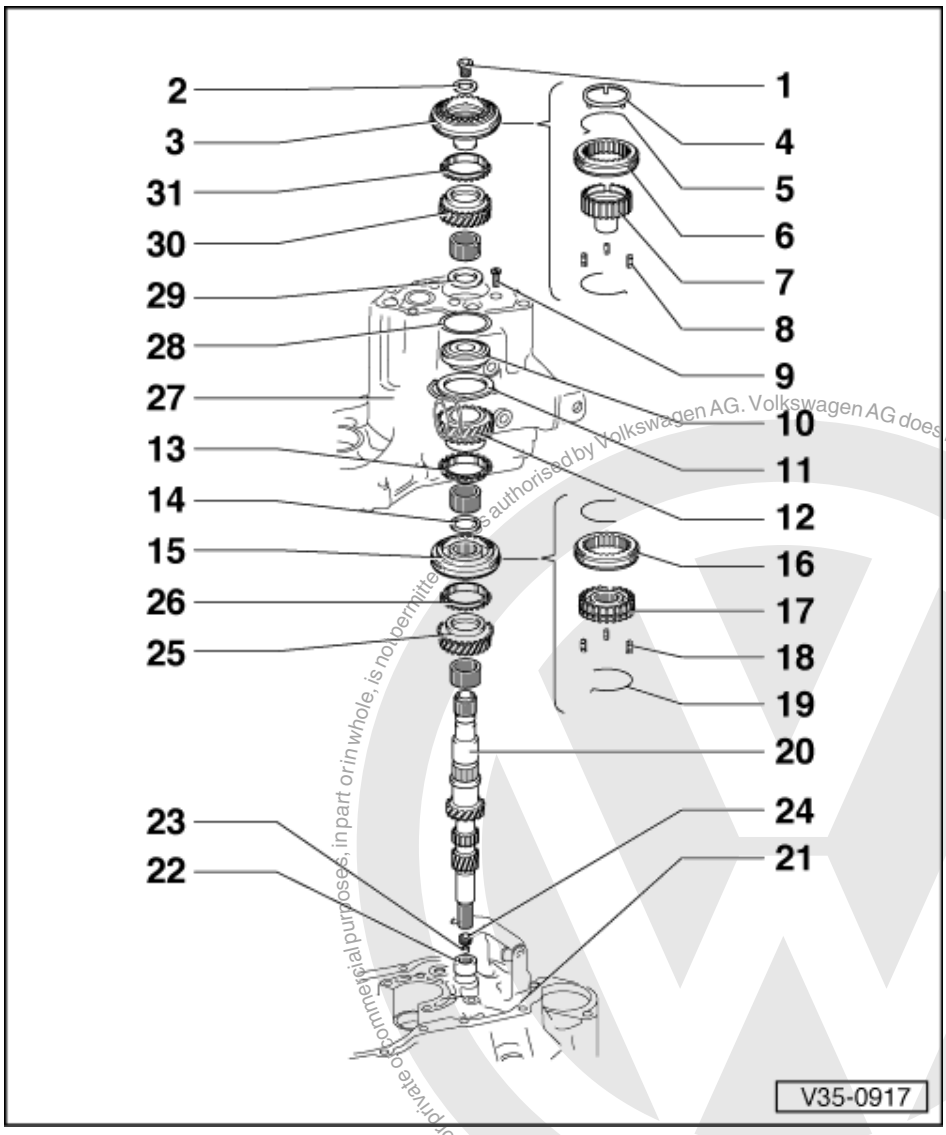

Notes:

- When installing new gears, consult technical data =>Page 2 .

1 Bolt M17, 150 Nm
- Renew
- Removing and installing => from page 80

2 Dished washer

3 5th gear locking collar/synchro-hub
- Removing and installing => from page 80

4 Check ring
- Prevents the locking pieces drifting out
- Removing =>Fig. 14
- Installing => Fig. 15

5 Spring

Protected by copyright. Copying for private or commercial purposes, in part or in whole, is not permitted unless authorised by Volkswagen AG. Volkswagen AG does not guarantee or accept any liability with respect to the correctness of information in this document. Copyright by Volkswagen AG.
satelettronica

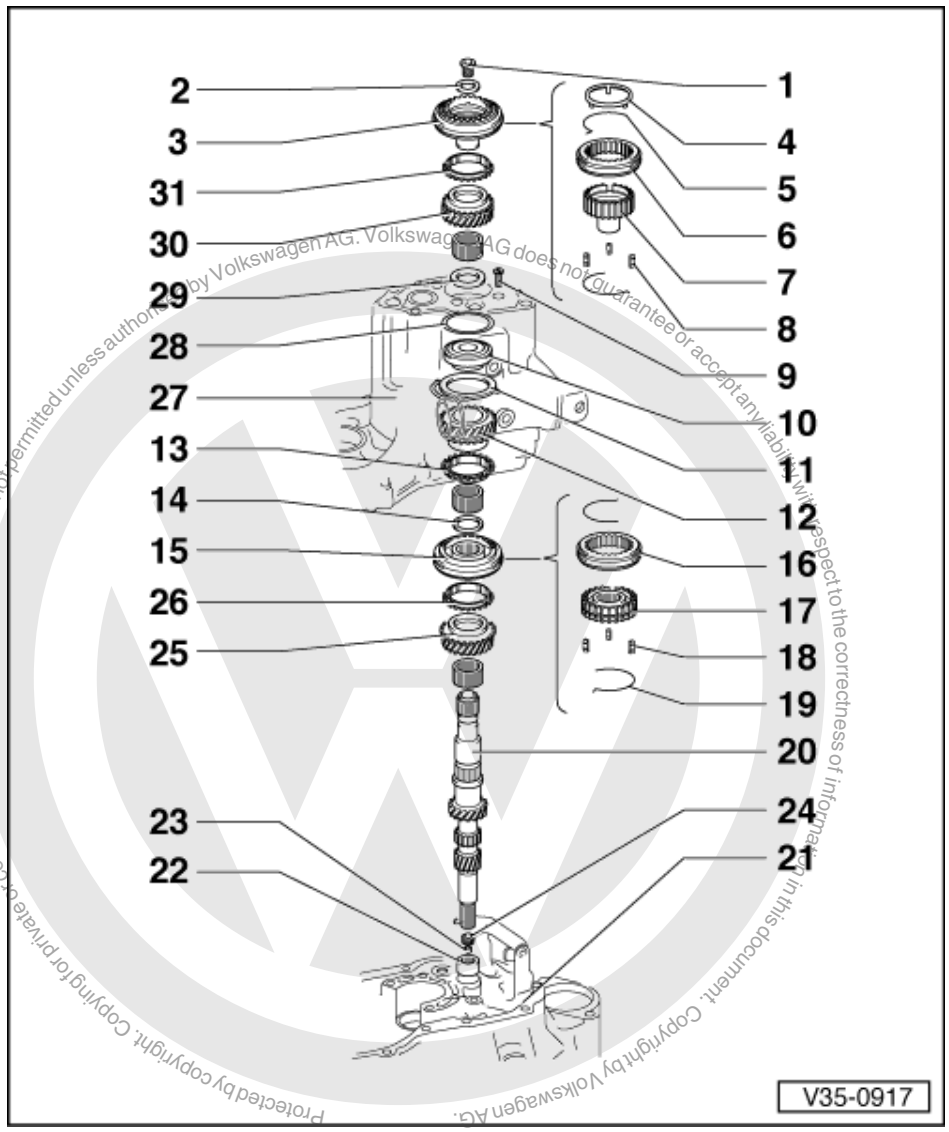

6 5th gear locking collar
- Installation position => Fig. 12

7 5th gear synchro-hub

8 Locking pieces (Qty. 3)

9 Oval-head countersunk screw
M7 x 23, 15 Nm
- Qty. 4

10 Grooved ball bearing
- Pressing off => Fig. 6
- Is pressed into gearbox housing when input shaft is installed => from page 80

11 Tensioning plate
- Locks grooved ball bearing in place

12 Selector gear for 4th gear

satelettronica

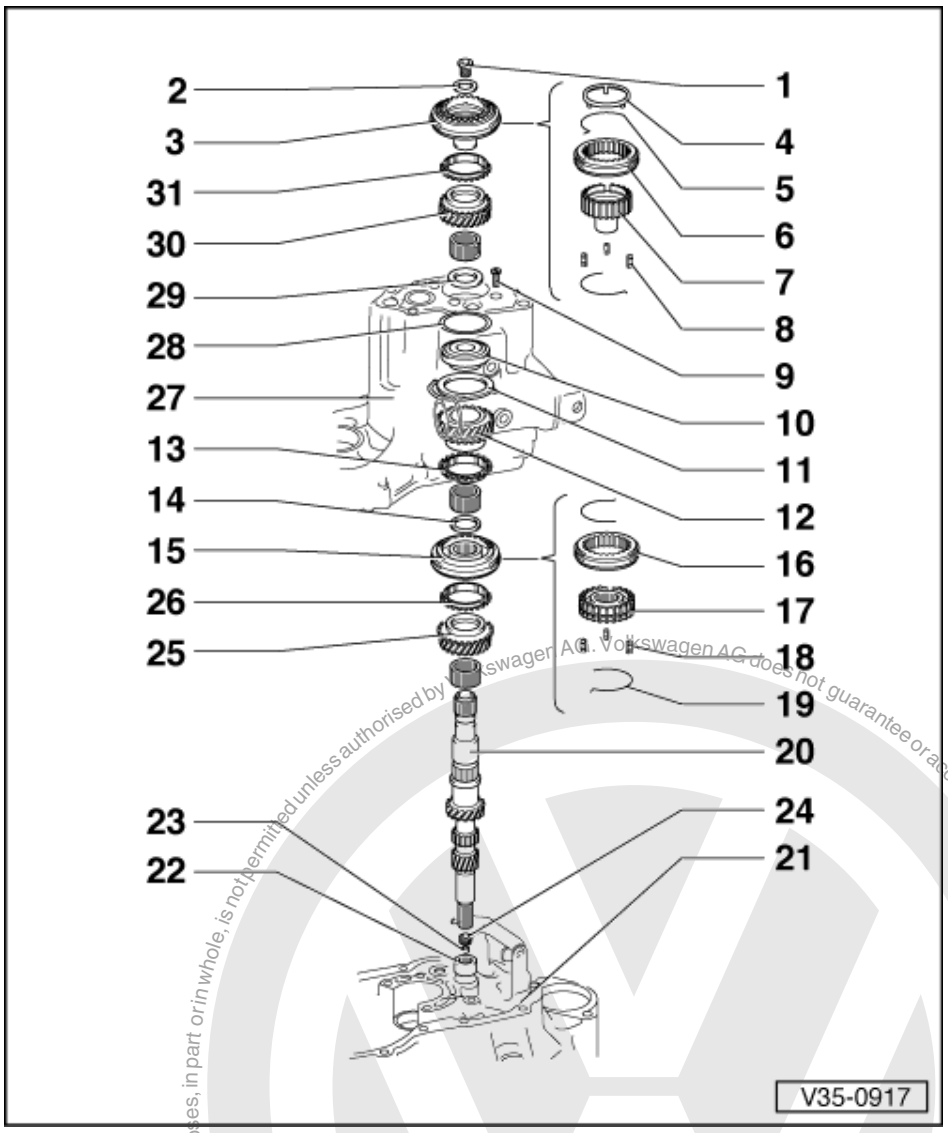

13 4th gear synchro-ring
- Checking for wear => Fig. 8

14 Circlip
- Renew

15 Locking collar with 3rd and 4th gear synchro-hub
- Press off with 3rd gear wheel => Fig. 7
- Synchro-hub installation position => Fig. 9
- Assembling => Fig. 10
- Pressing on => Fig. 11

16 Locking collar
17 Synchro-hub
18 Locking pieces (Qty. 3)
19 Spring
20 Input shaft

Protected by copyright. Copyright by Volkswagen AG. Volkswagen AG does not guarantee or accept any liability with respect to the correctness of information in this document. Copyright by Volkswagen AG. Volkswagen AG, in part or in whole, is not permitted unless authorised by Volkswagen AG. Volkswagen AG does not guarantee or accept any liability with respect to the correctness of information in this document. Copyright by Volkswagen AG.
satelettronica

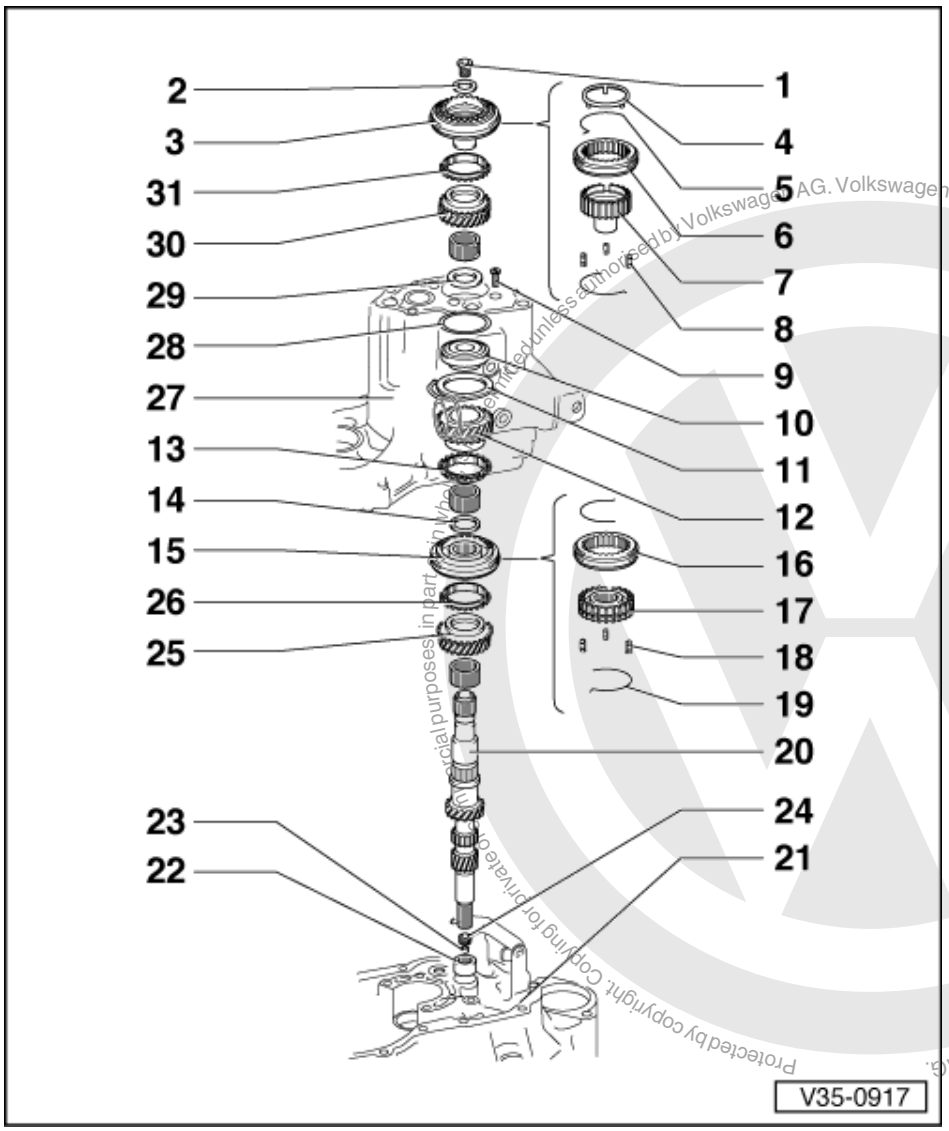

21 Clutch housing

22 Needle roller bearing

- For input shaft
- Removing and installing
  => Page 113

23 Sealing ring for clutch push rod

- Can be renewed with gearbox removed (not disassembled)
- Lever out with screwdriver => Fig. 1
- Installation position => Fig. 2
- Driving in => Fig. 3

24 Bearing bush for clutch push rod

- Installation position => Fig. 2
- Pulling out => Fig. 4
- Can be renewed with gearbox removed (not disassembled)
- Driving in => Fig. 5

Protected by copyright. Copying for private or commercial purposes, in part or in whole, is not permitted unless authorised by Volkswagen AG. Volkswagen AG does not guarantee or accept any liability with respect to the correctness of information in this document. Copyright by Volkswagen AG.
satelettronica

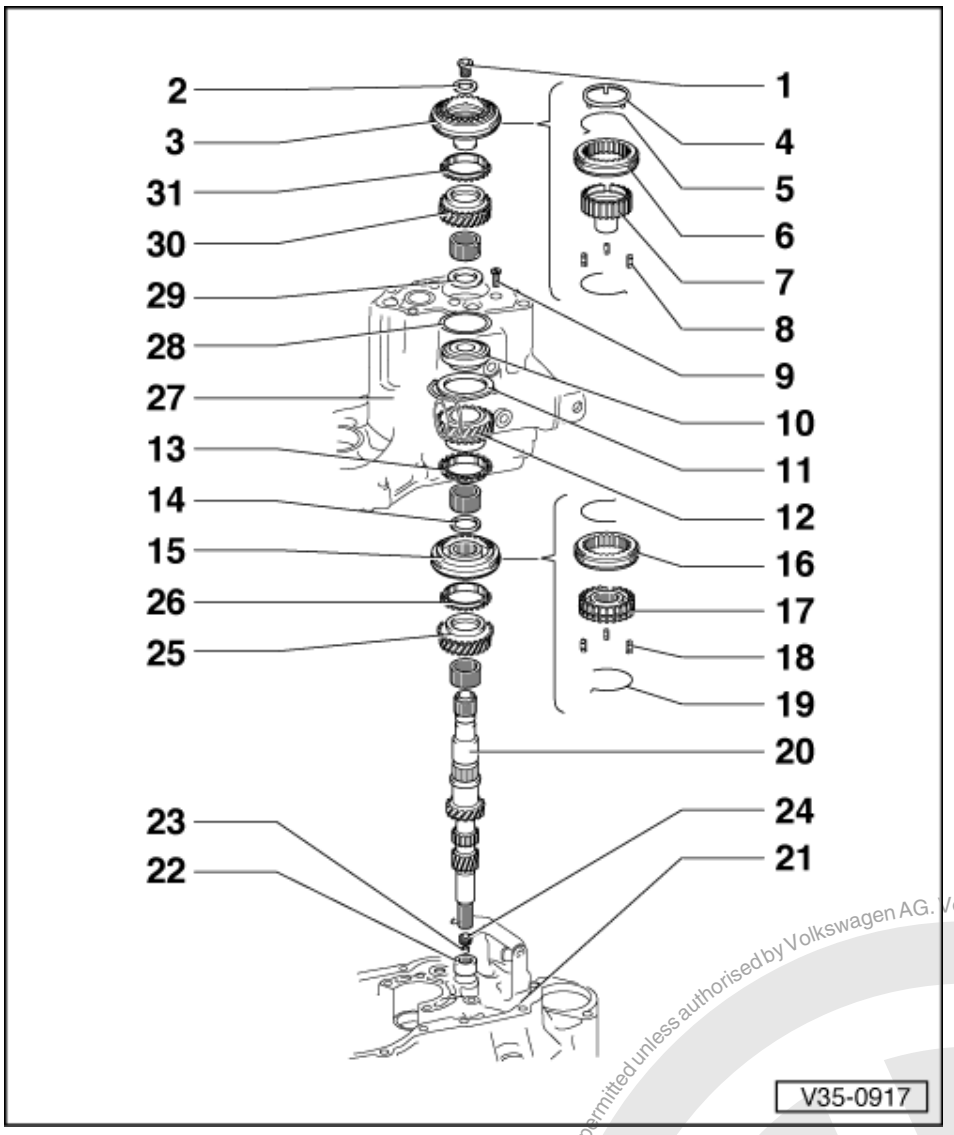

25 Selector gear for 3rd gear

26 3rd gear synchro-ring
- Checking for wear
  => Fig. 8

27 Gearbox housing

28 Shim
- For input shaft
- Note page 78

29 Thrust washer
- Installation position => Fig. 13
- Position 5th gear synchro-ring (item 31), then place 5th gear wheel (item 30) onto synchro-hub (item 7)

30 Selector gear for 5th gear

31 5th gear synchro-ring
- Check for wear
  => Fig. 8

Protected by copyright. Copying for private or commercial purposes, in part or in whole, is not permitted unless authorised by Volkswagen AG. Volkswagen AG does not guarantee or accept any liability with respect to the correctness of information in this document. Copyright by Volkswagen AG.
satelettronica

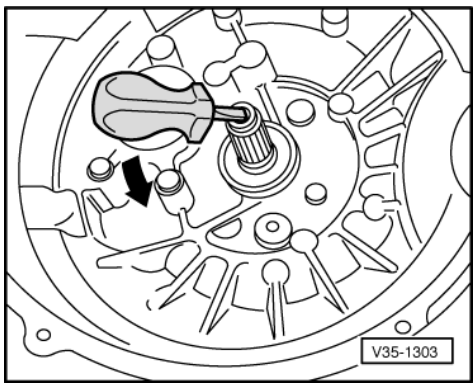

-> Fig.1 Levering out clutch push rod seal

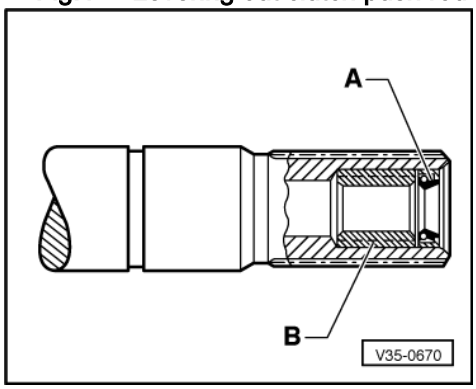

-> Fig.2 Installation position of seal and mounting bush

A - Clutch push rod seal
B - Clutch push rod mounting bush

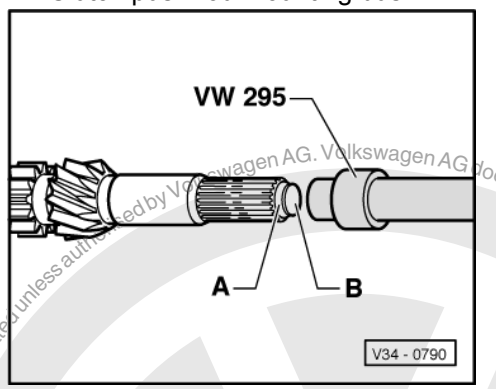

-> Fig.3 Driving in clutch push rod seal

- Drive in seal -A- flush with the assembly plugs -B- supplied. Take off assembly plugs. The seal now has a specified installation depth of 0.8 ... 1.3 mm. Apply a thin film of oil to sealing lip.

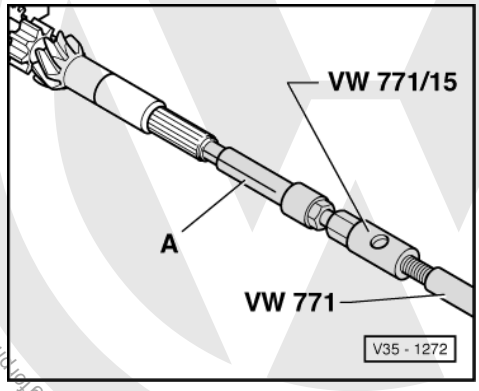

satelettronica
Protected by copyright. Copying for private or commercial purposes, in part or in whole, is not permitted unless authorised by Volkswagen AG. Volkswagen AG does not guarantee or accept any liability with respect to the correctness of information in this document. Copyright by Volkswagen AG.

-> Fig.4 Pulling out clutch push rod mounting bush

A - Internal extractor, e.g. Kukko 21/01, 8 ... 12 mm

- Use threaded adapter from counter support, e.g. Kukko 22/1 for connecting internal extractor and special tool VW 771/15.

Note:

With input shaft installed, pull out bearing bush using counter-support, e.g. Kukko 22/1 via thrust piece VW 512.

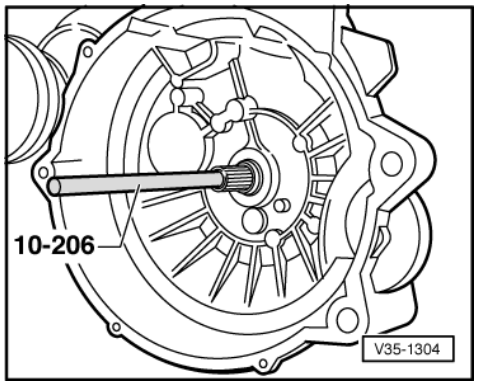

-> Fig.5 Driving in clutch push rod mounting bush as far as stop

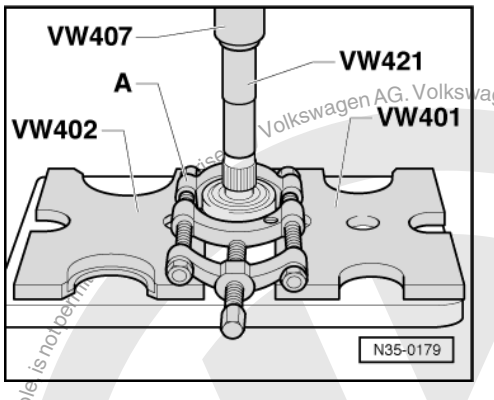

-> Fig.6 Pressing off grooved ball bearing

A - Separating tool 12...75 mm e.g. Kukko 17/1

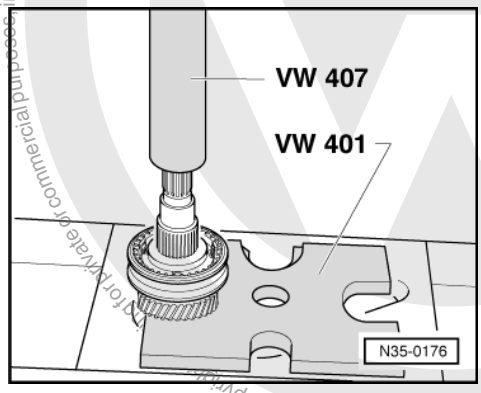

Volkswagen AG. Volkswagen AG does not guarantee or accept any liability with respect to the correctness of information in this document. Copyright by Volkswagen AG.
Protected by copyright. Copying for private or commercial purposes, in part or in whole is not permitted unless authorised by Volkswagen AG.
satelettronica

-> Fig.7 Pressing off 3rd and 4th gear synchro hub and locking collar with 3rd gear sliding wheel

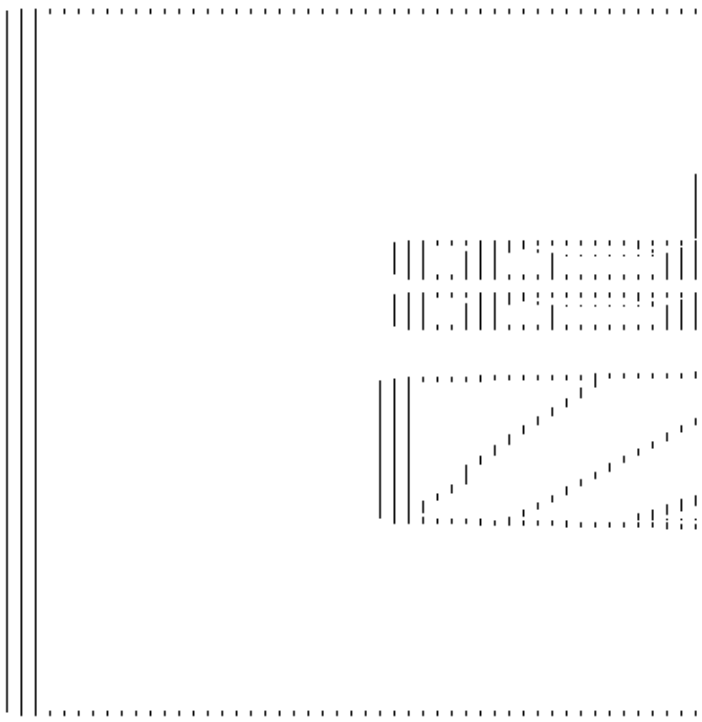

-> Fig.8 Checking synchro-ring for wear

- Press synchro-ring onto the gear cone and measure gap "a" with feeler gauge.

Gap "a"	New dimension	Wear limit
3rd gear 4th gear 5th gear	1.15 ... 1.75 mm 1.3 ... 1.9 mm 1.3 ... 1.9 mm	0.5 mm

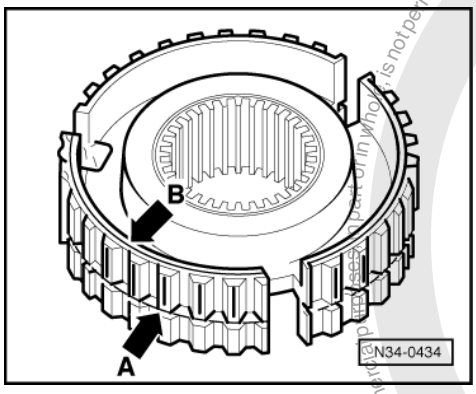

-> Fig.9 Installation position of 3rd and 4th gear synchro-hub

The shorter teeth below the deeper circumferential groove (arrow A) faces toward 3rd gear.

The groove on the top (arrow B) points towards 4th gear.

Protected by copyright. Copying for private or commercial purposes, in part or in whole, is not permitted unless authorised by Volkswagen AG. Volkswagen AG does not guarantee or accept any liability with respect to the correctness of information in this document. Copyright by Volkswagen AG.
satelettronica

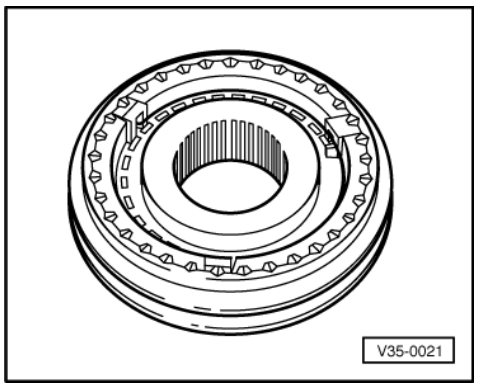

-> Fig.10 Assembling 3rd and 4th gear locking collar/synchro-hub

- Slide locking collar over synchro-hub.

The recesses for locking pieces in synchro-hub and locking collar must align.

- Insert locking pieces and install springs 120° off-set. The angled end of the spring must locate in the hollow locking piece.

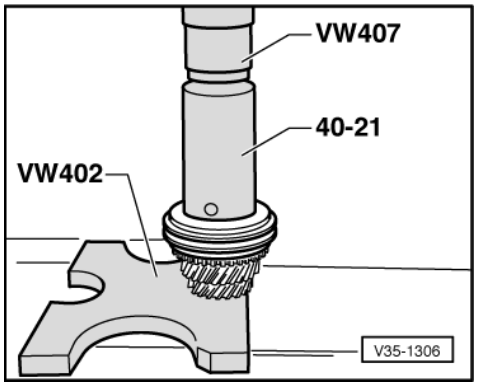

-> Fig.11 Pressing on 3rd and 4th gear synchro-hub with locking collar

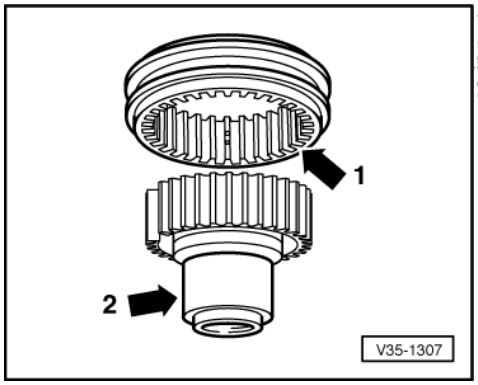

-> Fig.12 Installation position of 5th gear locking collar

- Slide locking collar over synchro-hub.

The recesses for locking pieces in synchro-hub and locking collar must align.

The chamfer on the spline (arrow 1) faces toward the 5th gear synchro-hub shaft (arrow 2).

Protected by copyright. Copying for private or commercial purposes, in part or in whole, is not permitted unless authorised by Volkswagen AG. Volkswagen AG does not guarantee or accept any liability with respect to the correctness of information in this document. Copyright by Volkswagen AG.
satelettronica

- Insert locking pieces and install springs 120° off-set. The angled end of the spring must locate in the hollow locking piece.

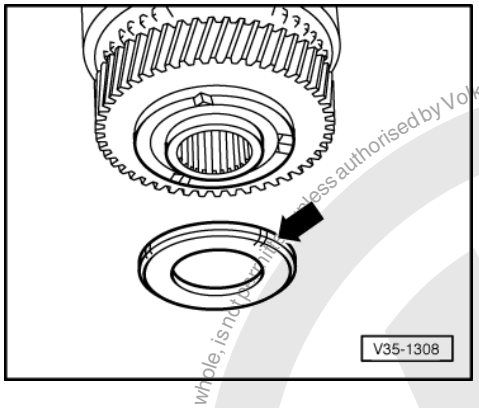

-> Fig.13 Installation position of thrust washer for 5th gear wheel

The chamfer (arrow) is located opposite the sliding gear wheel.

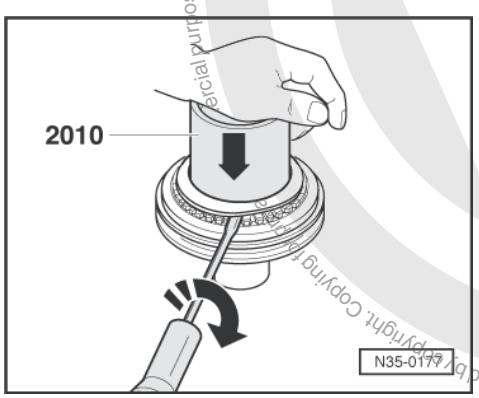

-> Fig.14 Removing thrust ring

- Press tube 2010 into the synchro-hub/thrust ring. Lever thrust ring out of synchro-hub from alternate sides.
- The thrust ring must be positioned fully on the tube section 2010 => Fig. 15
- Take off thrust ring together with tube section 2010.

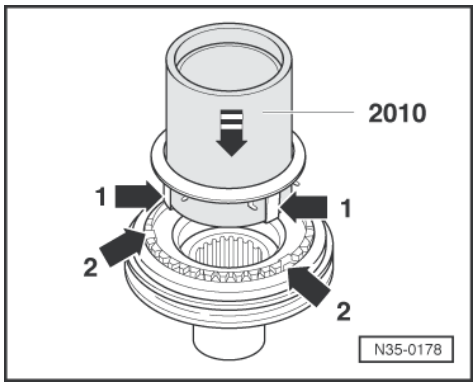

-> Fig.15 Installing thrust ring

- Insert thrust ring together with tube section 2010 into 5th gear synchro-hub/locking collar. The shoulders (arrow 1) lock in the recess (arrow 2) for the synchro-hub locking pieces.
- Take off tube 2010, the shoulders must lock in position in the synchro-hub when this is done.

Protected by copyright. Copying for commercial purposes, in part or in whole, is not permitted without the express authorised by Volkswagen AG. Volkswagen AG does not guarantee or accept any liability with respect to the correctness of information in this document. Copyright by Volkswagen AG.
satelettronica

2 - Dismantling and assembling output shaft

2.1 - Dismantling and assembling output shaft

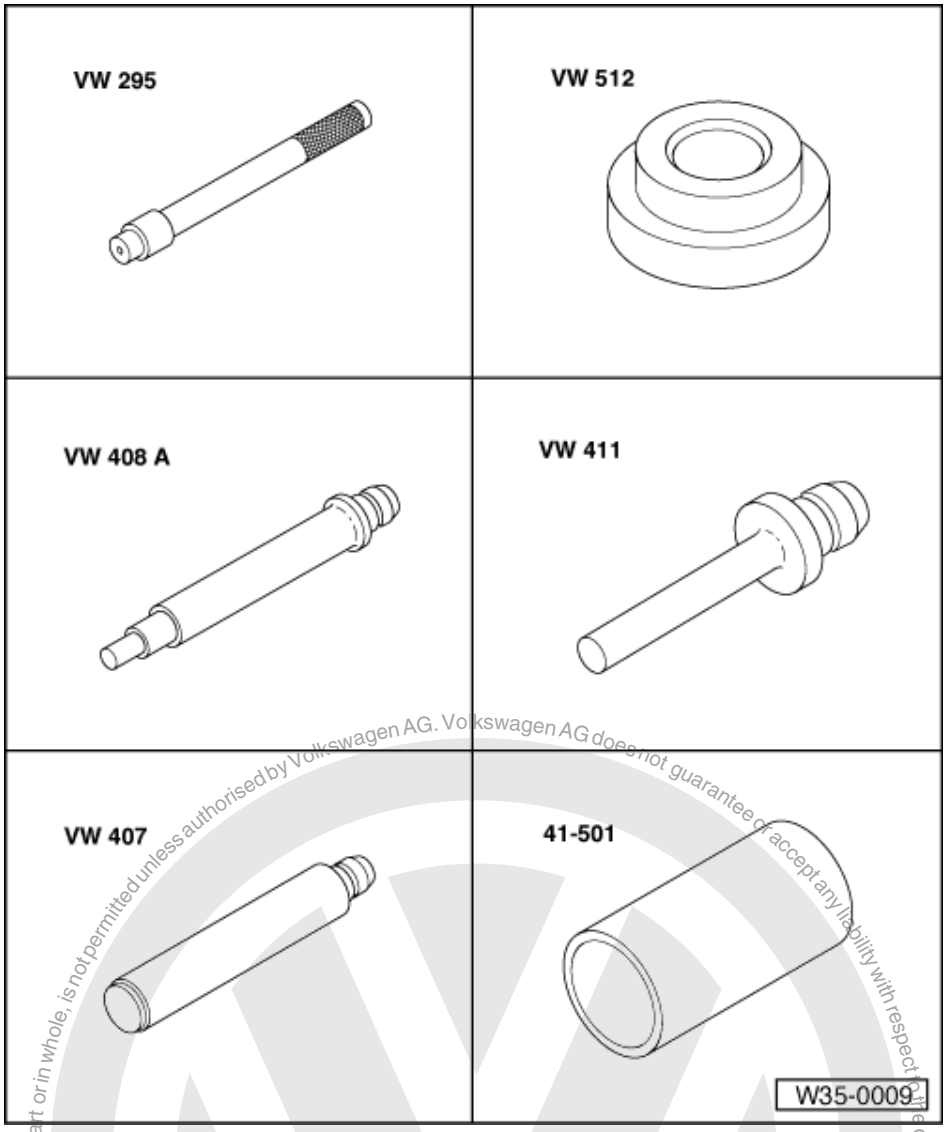

Special tools and workshop equipment required

- VW 295 Drift
- VW 512 Press disk
- VW 408 A Press tool
- VW 411 Press tool
- VW 407 Press tool
- 41-501 Drift sleeve

Protected by copyright. Copying for private or commercial purposes, in part or in whole, is not permitted unless authorised by Volkswagen AG. Volkswagen AG does not guarantee or accept any liability with respect to the correctness of information in this document. Copyright by Volkswagen AG.
satelettronica

Special tools and workshop equipment required

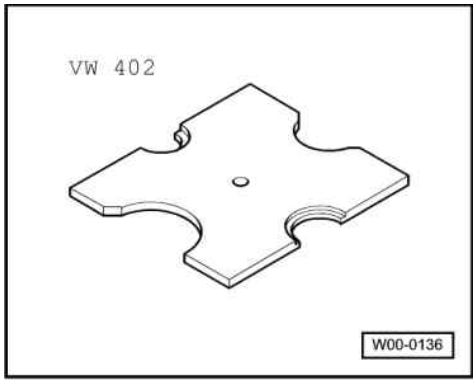

- VW 402 Press plate

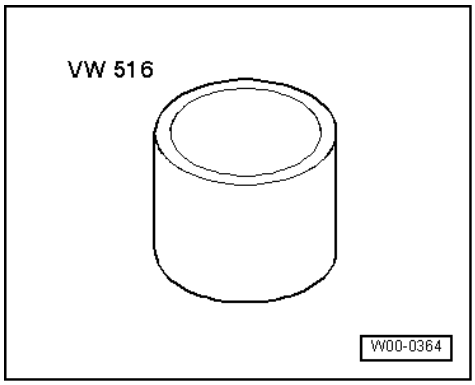

- VW 516 Tube

Protected by copyright. Copying for private or commercial purposes, in part or in whole, is not permitted unless authorised by Volkswagen AG. Volkswagen AG does not guarantee or accept any liability with respect to the correctness of information in this document. Copyright by Volkswagen AG.

satelettronica

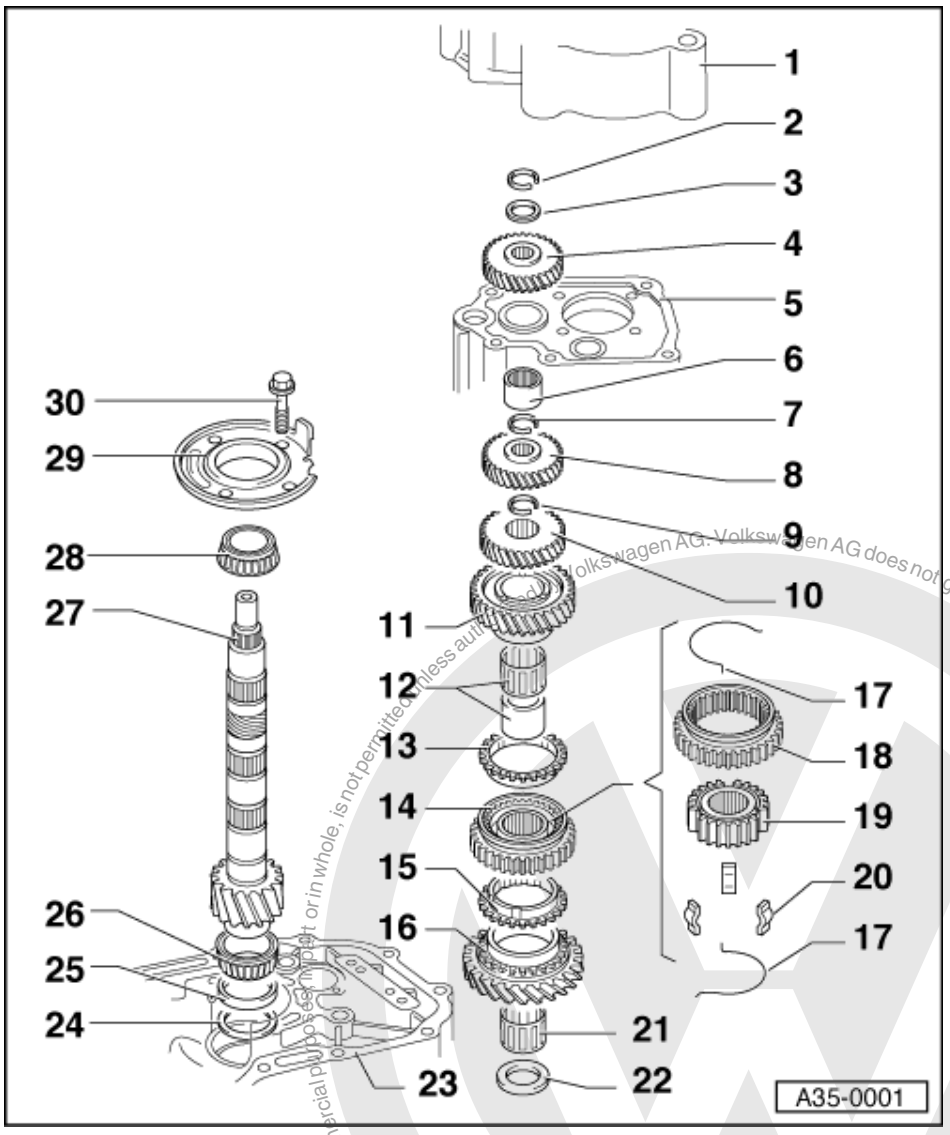

Notes:

- When installing new gears or a new output shaft consult technical data =>Page 2 .
- If the output shaft or taper roller bearings have been renewed then carry out output shaft adjustment => Page 143 .

1 Gearbox housing cover
2 5th gear wheel securing ring
  - Renew
3 Thrust washer
4 5th gear
  - Installing => from page 80
5 Gearbox housing

Copyright by Volkswagen AG. Volkswagen AG does not guarantee or accept any liability with respect to the correctness of information in this document. Copyright by Volkswagen AG. Protected by copyright. Copying for private or commercial purposes, in part or in whole, is not permitted unless authorised by Volkswagen AG.
satelettronica

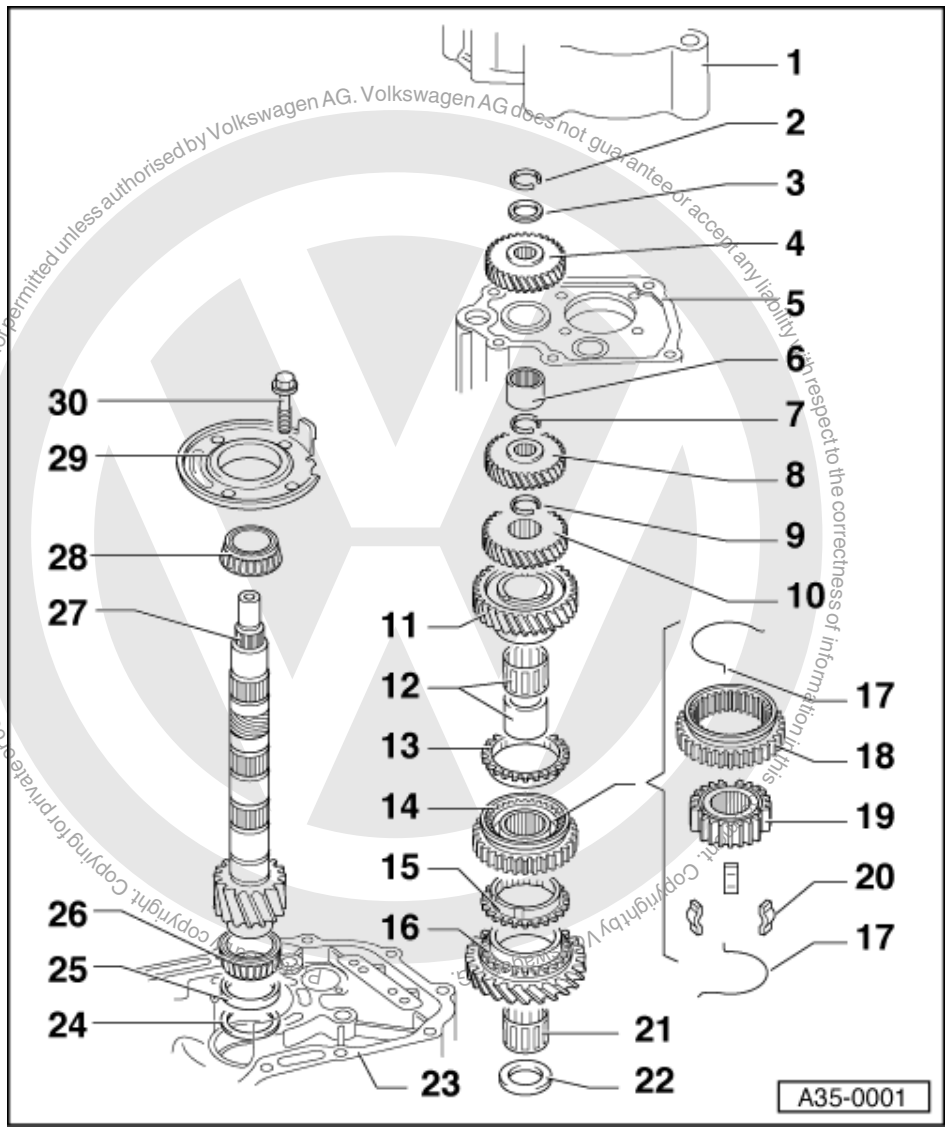

6 Needle bearing
- Removing and installing
  => Page 106

7 4th gear wheel securing ring
- Renew

8 4th gear wheel

9 3rd gear wheel securing ring
- Renew
- Redetermining thickness
  => from page 80

10 3rd gear
- Installation position => from page 80
- Adjusting axial play => from page 80

11 2nd gear

satelettronica

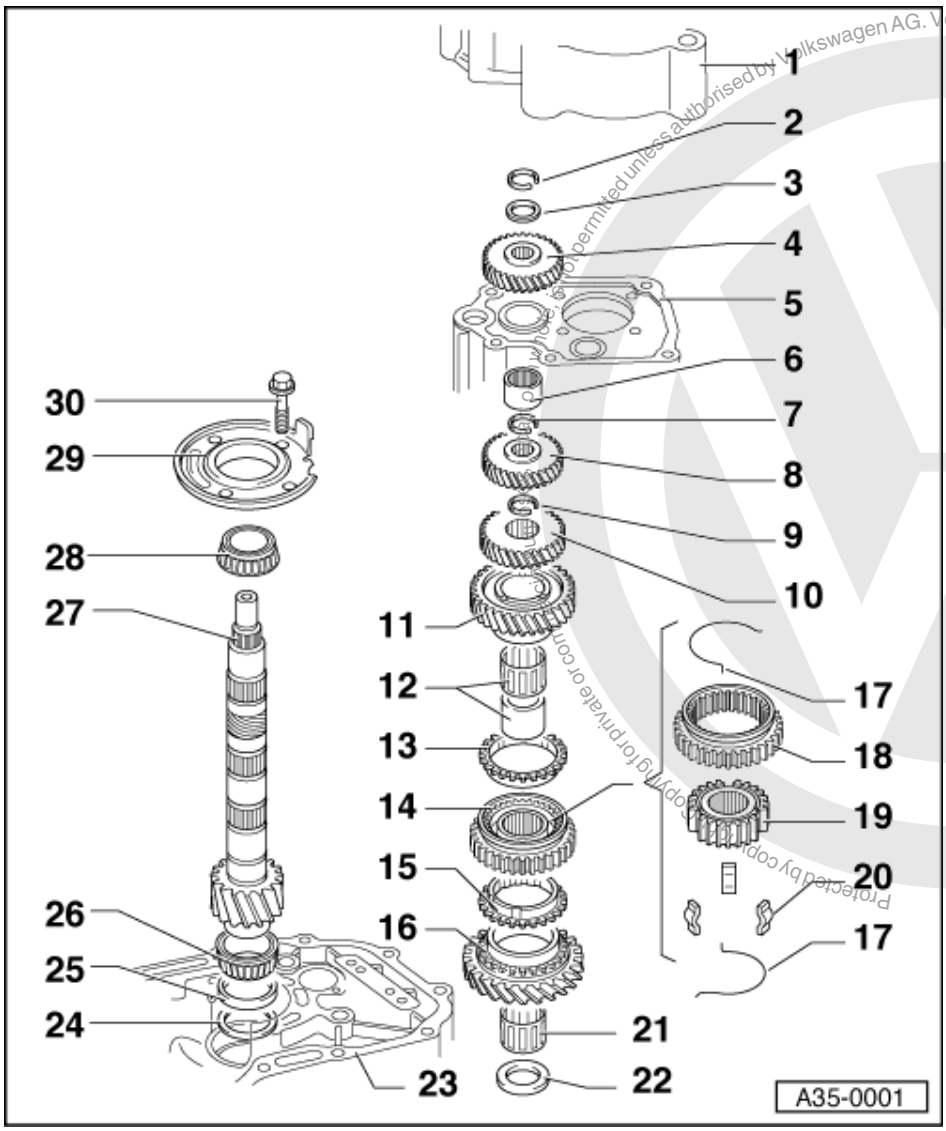

12 2nd gear wheel needle bearing
- Pulling off inner race => from page 80
- Pressing on inner race => from page 80

13 2nd gear synchro-ring
- Checking for wear
  => Fig. 1

14 1st and 2nd gear locking collar with synchro-hub
- Assembling locking collar/synchro hub => Fig. 3 and Fig. 4
- Removing and installing
  => from page 80

15 1st gear synchro-ring
- Checking for wear
  => Fig. 1
- Identification => Fig. 2

16 1st selector gear

17 Spring

Copyright by Volkswagen AG. Volkswagen AG does not guarantee or accept any liability with respect to the correctness of information in this document. Copyright by Volkswagen AG. Protected by copyright. Copying for private or commercial purposes, in part or in whole, is not permitted unless authorised by Volkswagen AG.
satelettronica

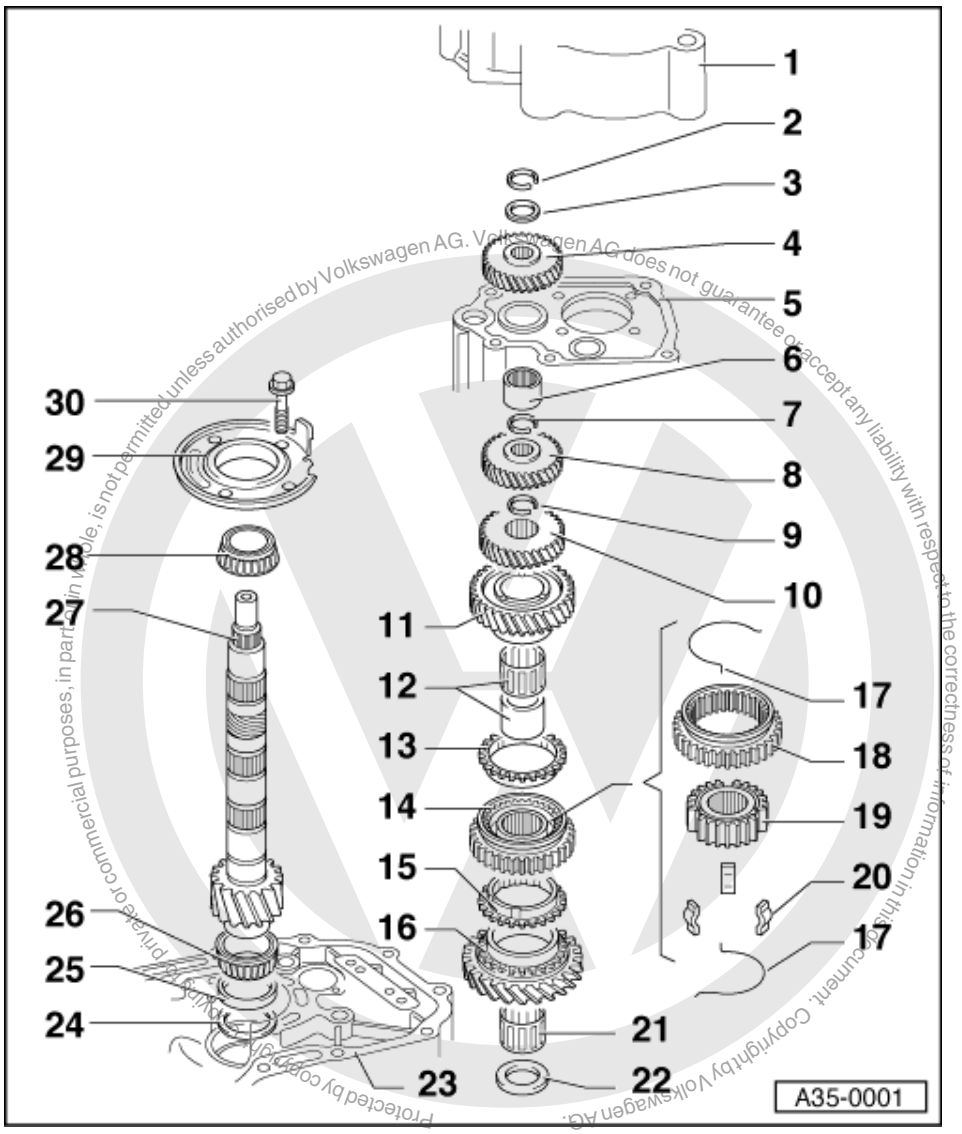

18 Locking collar
19 Synchro-hub
20 Locking pieces (Qty. 3)
21 Needle roller bearing
- For 1st gear

22 Thrust washer
- Installation position => from page 80

23 Clutch housing
24 Shim
- For output shaft
- Adjustment overview
  => Page 161

25 Small taper roller bearing outer race
- Pulling out => Fig. 5
- Pressing in => Fig. 6

satelettronica

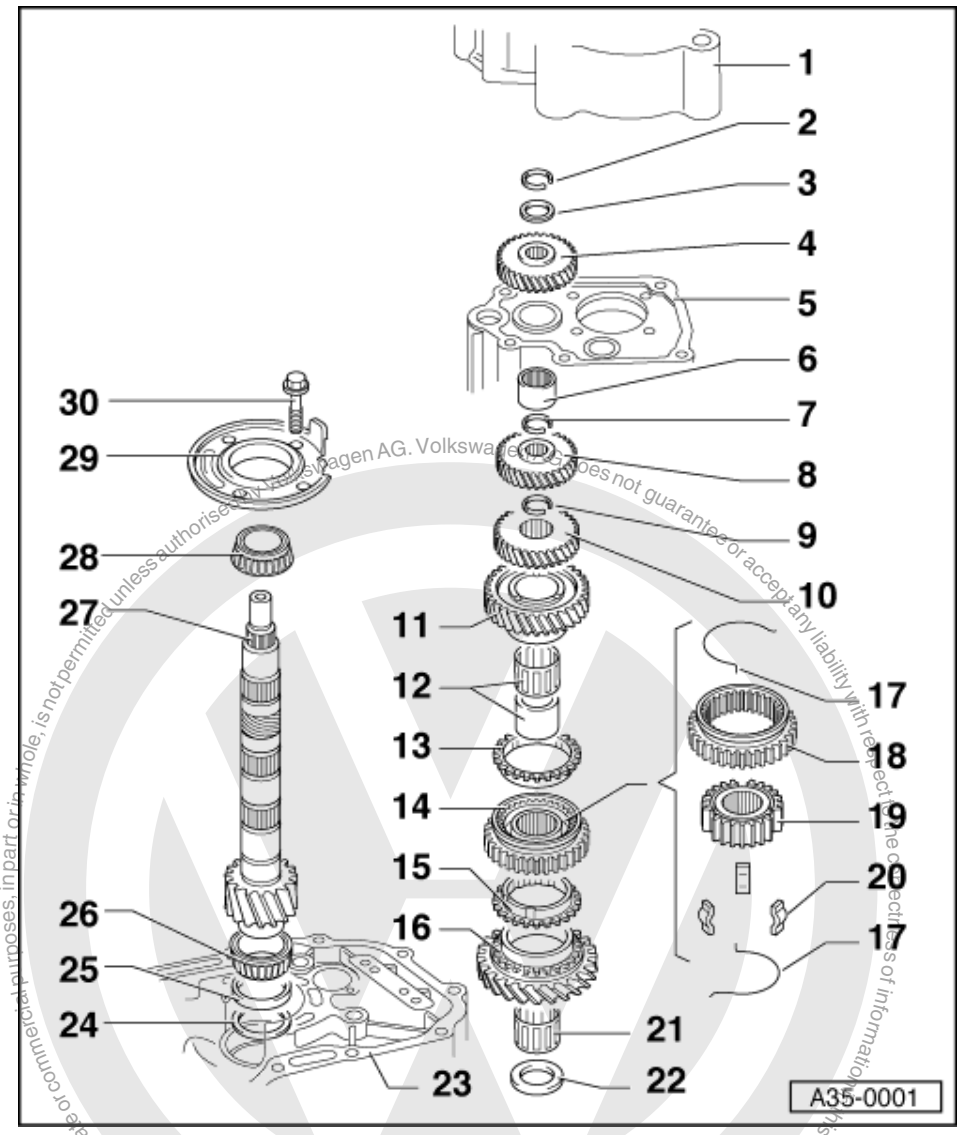

26 Small taper roller bearing inner race

- Pressing off => Fig. 7
- Pressing on => Fig.9

27 Output shaft

- Is paired with final drive gear wheel, always renew together as a set
- Adjusting => Page 143

28 Large taper roller bearing inner race

- Pressing off => Fig. 8
- Pressing on => Fig.9

29 Bearing support

- With large taper roller bearing outer race and stop for reverse gear wheel
- Only change outer race together with large taper roller bearing and bearing support

30 Hexagon bolt, 25 Nm then turn 90°further

satelettronica

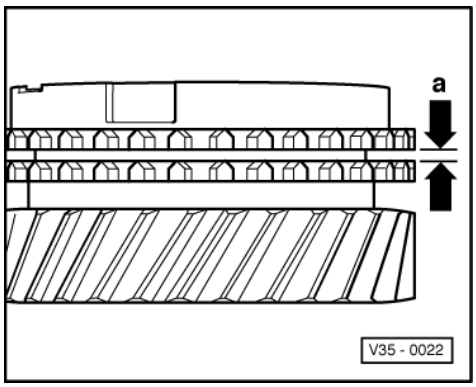

-> Fig.1 Checking synchro-ring for wear

- Press synchro-ring onto the gear cone and measure gap "a" with feeler gauge.

Gap "a"	New dimension	Wear limit
1st and 2nd gear	1.1 ... 1.7 mm	0.5 mm

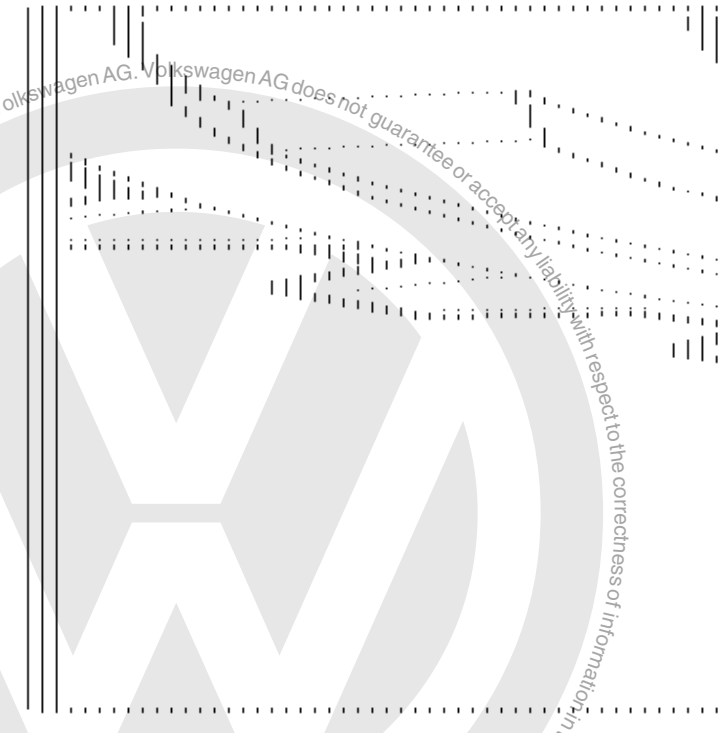

-> Fig.2 Identifying 1st gear synchro-ring

Identification: 3 teeth missing (arrow).

This synchro-ring must only be fitted to 1st gear.

Protected by copyright. Copying for private or commercial purposes, in part or in whole, is not permitted unless authorised by Volkswagen AG. Volkswagen AG does not guarantee or accept any liability with respect to the correctness of information in this document. Copyright by Volkswagen AG.

satelettronica

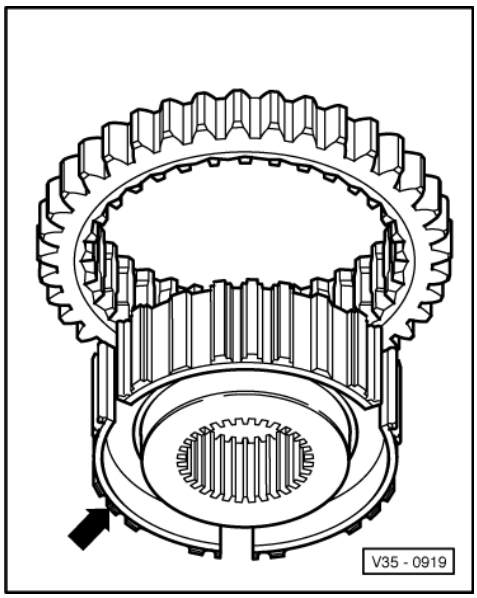

-> Fig.3 Assembling 1st and 2nd gear locking collar and synchro-hub

Installation position of synchro-hub:

Identification shallow groove on face end (arrow) faces toward outer splines of locking collar.

- Slide locking collar over synchro-hub.

The recesses for locking pieces in synchro-hub and locking collar must align.

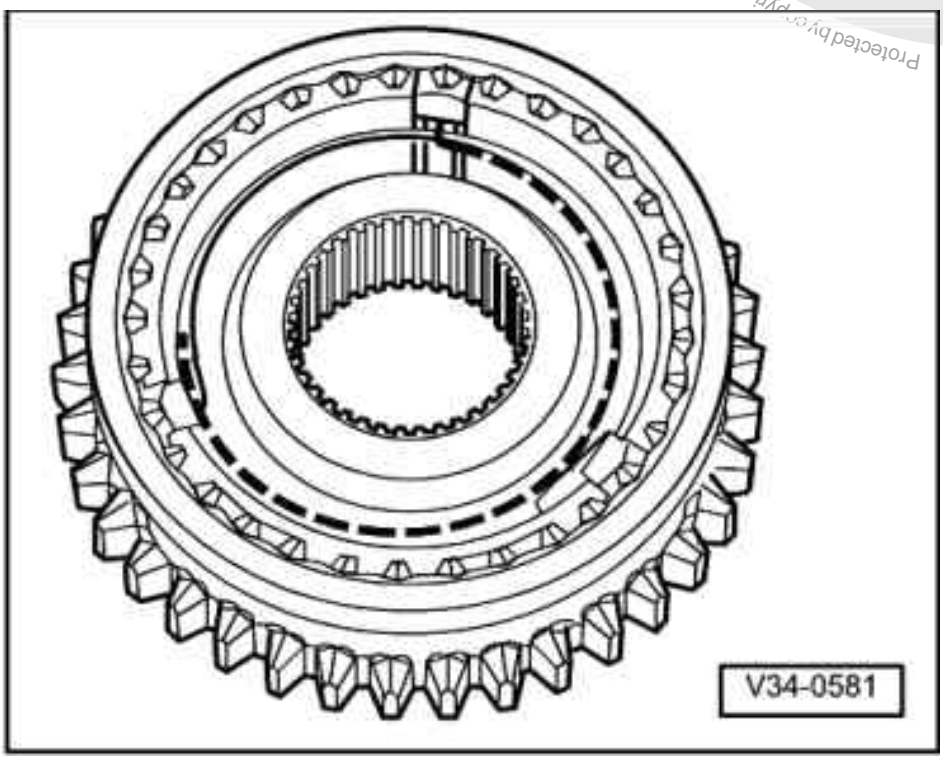

-> Fig.4 Assembling 1st and 2nd gear locking collar/synchro-hub

- Insert locking pieces and install springs 120° off-set. The angled end of the spring must locate in the hollow locking piece.

Protected by copyright. Copying for private or commercial purposes, in part or in whole, is not permitted unless authorised by Volkswagen AG. Volkswagen AG does not guarantee or accept any liability with respect to the correctness of information in this document. Copyright by Volkswagen AG.
satelettronica

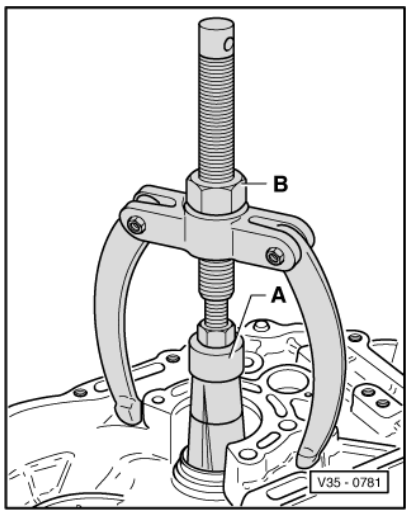

-> Fig.5 Pulling out small taper roller bearing outer race

A - Internal extractor 37 ... 46 mm, e.g. Kukko 21/6

B - Counter support, e.g. Kukko 22/2

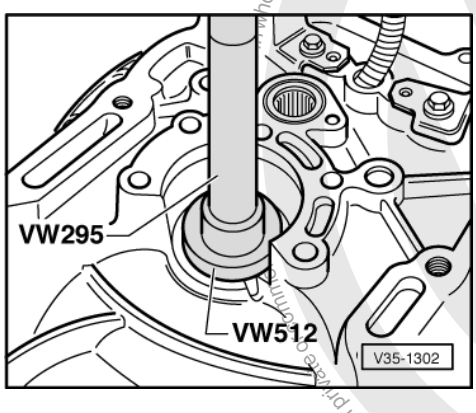

-> Fig.6 Pressing in small taper roller bearing outer race

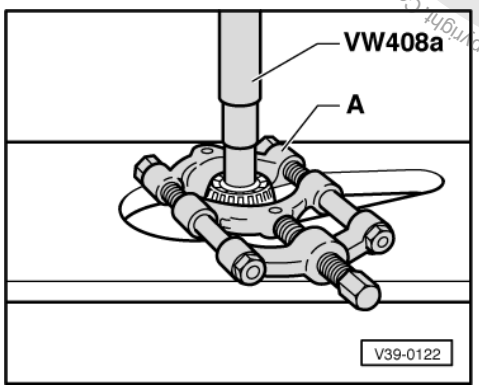

Protected by copyright. Copying for private or commercial purposes, in part or in whole, is not permitted unless authorised by Volkswagen AG. Volkswagen AG does not guarantee or accept any liability with respect to the correctness of information in this document. Copyright by Volkswagen AG.
satelettronica

-> Fig.7 Pressing off small taper roller bearing inner race

Note:

Inner race can also be pulled off using taper roller bearing puller V.A.G 1582 and grip V.A.G 1582/5.

A - Separating device 22 ... 115 mm, e.g. Kukko 17/2

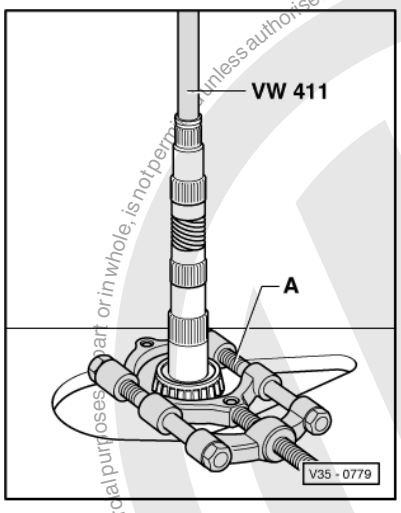

-> Fig.8 Pressing off large taper roller bearing inner race

A - Separating device 22 ... 115 mm, e.g. Kukko 17/2

Note:

Inner race can also be pulled off using taper roller bearing puller V.A.G 1582 and grip V.A.G 1582/7.

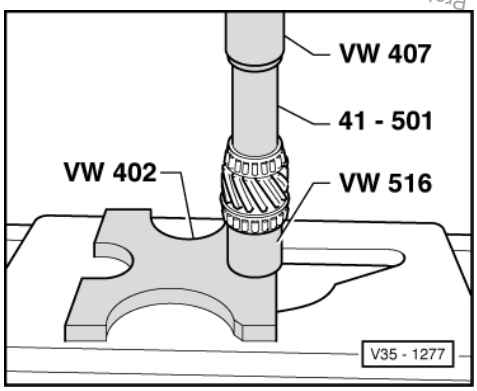

Protected by copyright. Copying for private or commercial purposes, in part or in whole, is not permitted unless authorised by Volkswagen AG. Volkswagen AG does not guarantee or accept any liability with respect to the correctness of information in this document. Copyright by Volkswagen AG.
satelettronica

-> Fig.9 Heating small and large taper roller bearing inner race to about 100° C, fitting and pressing home

3 - Adjusting output shaft

3.1 - Adjusting output shaft

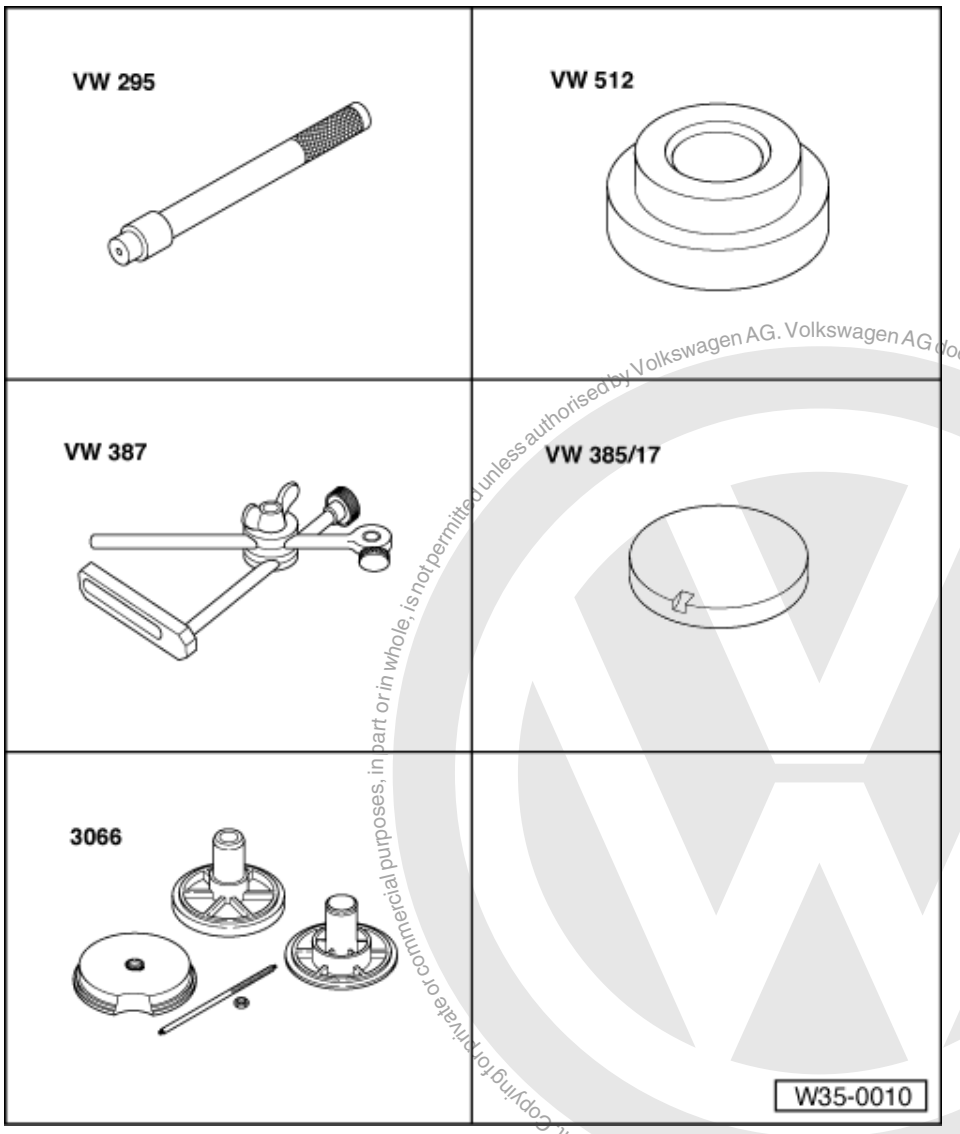

(Determining shim for output shaft)

Special tools and workshop equipment required

- VW 295 Drift
- VW 512 Press disk
- VW 387 Universal dial gauge bracket
- VW 385/17 End measuring plate
- 3066 Spindle from assembly tool
- Dial gauge

It is necessary to readjust the output shaft when

- Final drive

Protected by copyright. Copying for private or commercial purposes, in part or in whole, is not permitted unless authorised by Volkswagen AG. Volkswagen AG does not guarantee or accept any liability with respect to the correctness of information in this document. Copyright by Volkswagen AG.
satelettronica

- Clutch housing

or

- Taper roller bearing

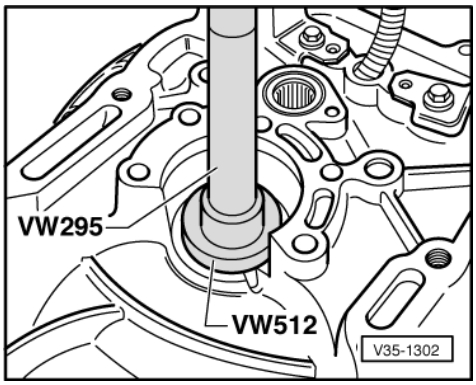

have been changed.

Adjustment overview => Page 161

- -> Press small taper roller bearing outer race together with a 0.65 mm thick shim fully into clutch housing.
- Insert output shaft and tighten bearing support securing bolts to 25 Nm and then turn 90° further.

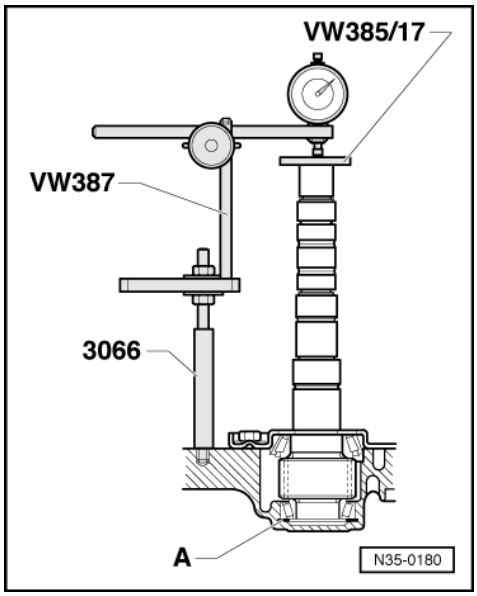

- -> Mount dial gauge (3 mm measuring range) and set to "0" with 1 mm preload.

  A - Shim 0.65 mm thick

- Move output shaft up and down and note dial gauge reading (example: 0.30 mm).

Note:

Do not turn the output shaft whilst measuring, otherwise the bearing will settle and a false reading will be given.

Determining thickness of shim

The specified bearing preload is obtained by adding
a constant preload figure of (0.20 mm)

Protected by copyright. Copyright by Volkswagen AG. Volkswagen AG does not guarantee or accept any liability with respect to the correctness of information in this document. Copyright by Volkswagen AG. Copying for private or commercial purposes, in part or in whole, is not permitted unless authorised by Volkswagen AG.
satelettronica

to the reading obtained (0.30 mm)
and the thickness of the shim installed (0.65 mm).

Example:

Shim installed	0.65 mm
+ Reading	0.30 mm
+ Preload (constant)	0.20 mm
Thickness of shim	1.15 mm

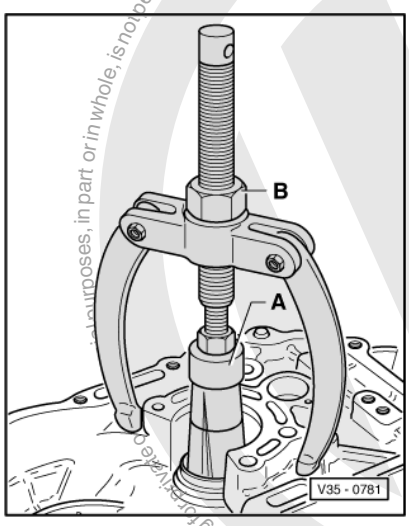

- -> Remove output shaft and pull out small taper roller bearing outer race.

A - Internal extractor 37 ... 46 mm, e.g. Kukko 21/6

B - Counter support, e.g. Kukko 22/2

The following adjustment shims are available:

Size (mm)	Part No.
0.65	020 311 391 P
0.70	020 311 391 Q
0.75	020 311 391
0.80	020 311 391 A
0.85	020 311 391 B
0.90	020 311 391 C
0.95	020 311 391 D
1.00	020 311 391 E
1.05	020 311 391 F
1.10	020 311 391 G
1.15	020 311 391 H
1.20	020 311 391 J
1.25	020 311 391 K
1.30	020 311 391 L
1.35	020 311 391 M
1.40	020 311 391 N

Varying tolerances make it possible to obtain the exact shim thickness required.

If the size of shim required is larger than that listed in the table, insert two shims totalling the correct figure.

Protected by copyright. Copying for private or commercial purposes, in part or in whole, is not permitted unless authorised by Volkswagen AG. Volkswagen AG does not guarantee or accept any liability with respect to the correctness of information in this document. Copyright by Volkswagen AG.
satelettronica

- Press in small taper roller bearing outer race together with the determined shim (in example 1.15 mm) (=>Page 141) and install output shaft. Tighten bearing support securing bolts in clutch housing to tightening torque.

Protected by copyright. Copying for private or commercial purposes, in part or in whole, is not permitted unless authorised by Volkswagen AG. Volkswagen AG does not guarantee or accept any liability with respect to the correctness of information in this document. Copyright by Volkswagen AG.

satelettronica

39 - Final drive, Differential

1 - Renewing flanged shaft oil seals (gearbox installed)

1.1 - Renewing flanged shaft oil seals (gearbox installed)

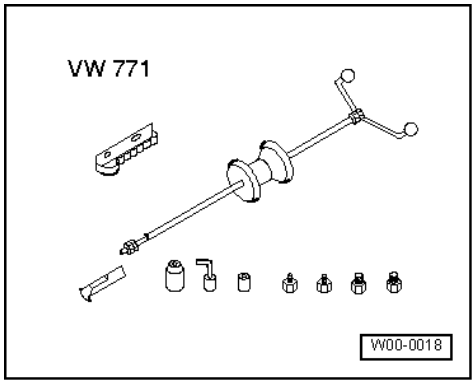

- Observe general repair instructions
  => Page 6 .

Special tools, testers and auxiliary items

- VW 771 Multi-purpose tool
- VW 771/37 Puller hooks

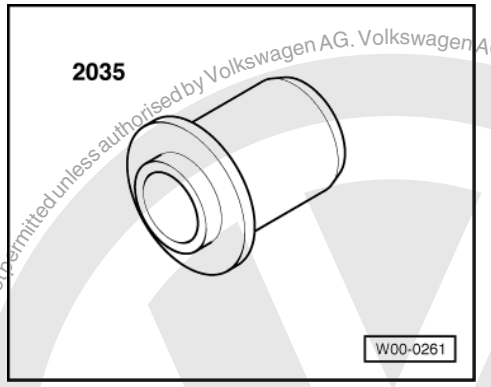

- 2035 Drift

Removing

- Before replacing left-hand oil seal:

- Remove drive shaft

=> Running gear, axles, steering; Repair group 40; Servicing drive shaft; Removing and installing drive shaft Servicing drive shaft Removing and installing drive shaft

- Before replacing right-hand oil seal:

- Turn steering to right onto full lock stop.

- Remove drive shaft protective cap from engine, if fitted.

Protected by copyright. Copying for private or commercial purposes, in part or in whole, is not permitted unless authorised by Volkswagen AG. Volkswagen AG does not guarantee or accept any liability with respect to the correctness of information in this document. Copyright by Volkswagen AG.
satelettronica

- Disconnect drive shaft from flanged shaft.

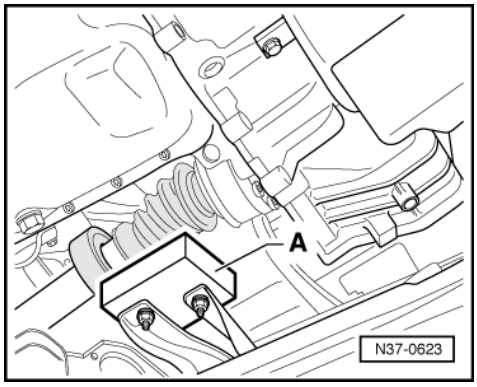

- Tie-up drive shaft as high as possible. Do not damage paint on drive shaft.
- -> Remove vibration damper -A- from sub-frame. Mark installation position.

Protected by copyright. Copying for private or commercial purposes, in part or in whole, is not permitted unless authorised by Volkswagen AG. Volkswagen AG does not guarantee or accept any liability with respect to the correctness of information in this document. Copyright by Volkswagen AG.

- Place drip tray underneath.
- -> Remove flange shaft cone head bolt.
- Remove flanged shaft with spring.

satelettronica

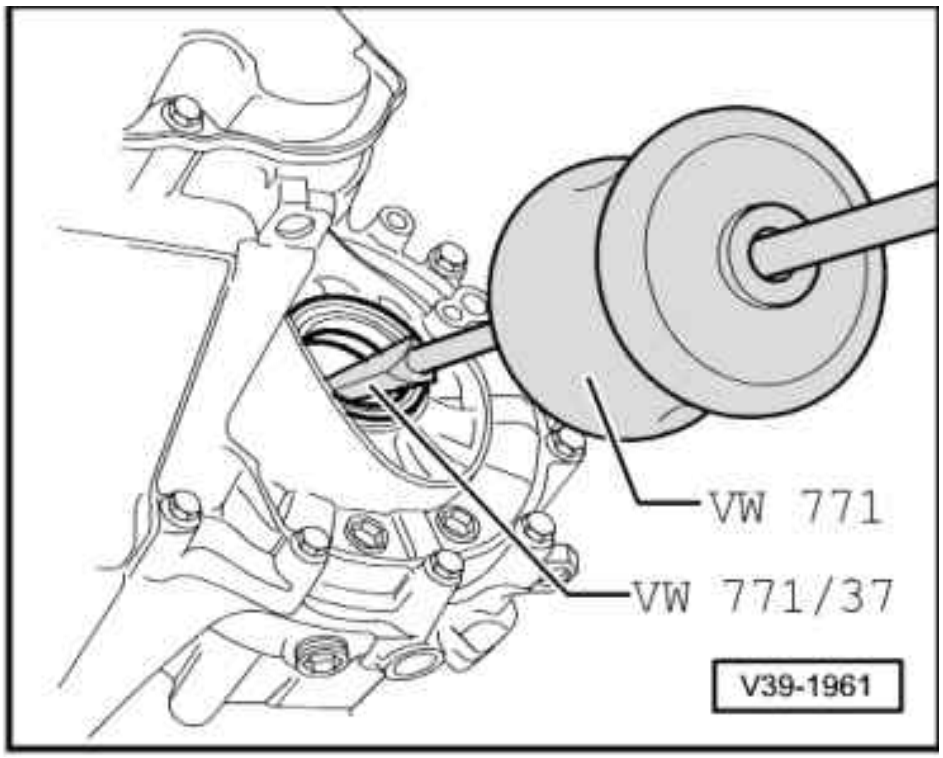

- -> Pull out seal.

Notes:

- Do not damage sleeve, otherwise leaks will occur.
- Replace sleeve if damaged
  => Page 114 .

Installing

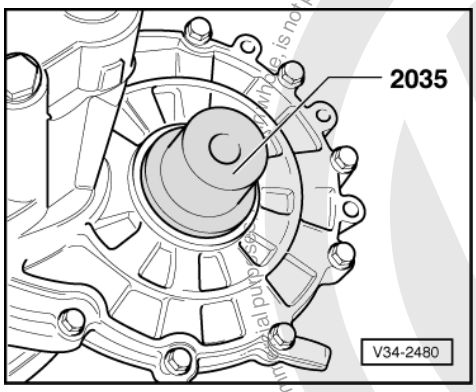

- -> Drive seal into sleeve onto stop, when doing this do not cant seal.
- Fill half of space between sealing lip and dust lip with grease.
- Insert flange shaft.
- Install cone head bolt into flange shaft threaded piece.
- Install left-hand drive shaft or attach right-hand drive shaft to flange shaft.
- Install drive shaft protective cover if necessary.

Check gearbox oil; if necessary top-up to lower edge of oil filler hole, specification =>from Page 2 .

Tightening torques

Flange shaft to gearbox (cone head bolt)	25 Nm
Drive shaft to flange shaft	40 Nm

Protected by copyright. Copyright by Volkswagen AG.
Copyright by Volkswagen AG. Volkswagen AG does not guarantee or accept any liability with respect to the correctness of information in this document.
Copyright by Volkswagen AG. Volkswagen AG does not guarantee or accept any liability with respect to the correctness of information in this document.
satelettronica

Drive shaft protective cover to engine	35 Nm

2 - Dismantling and assembling differential

2.1 - Dismantling and assembling differential

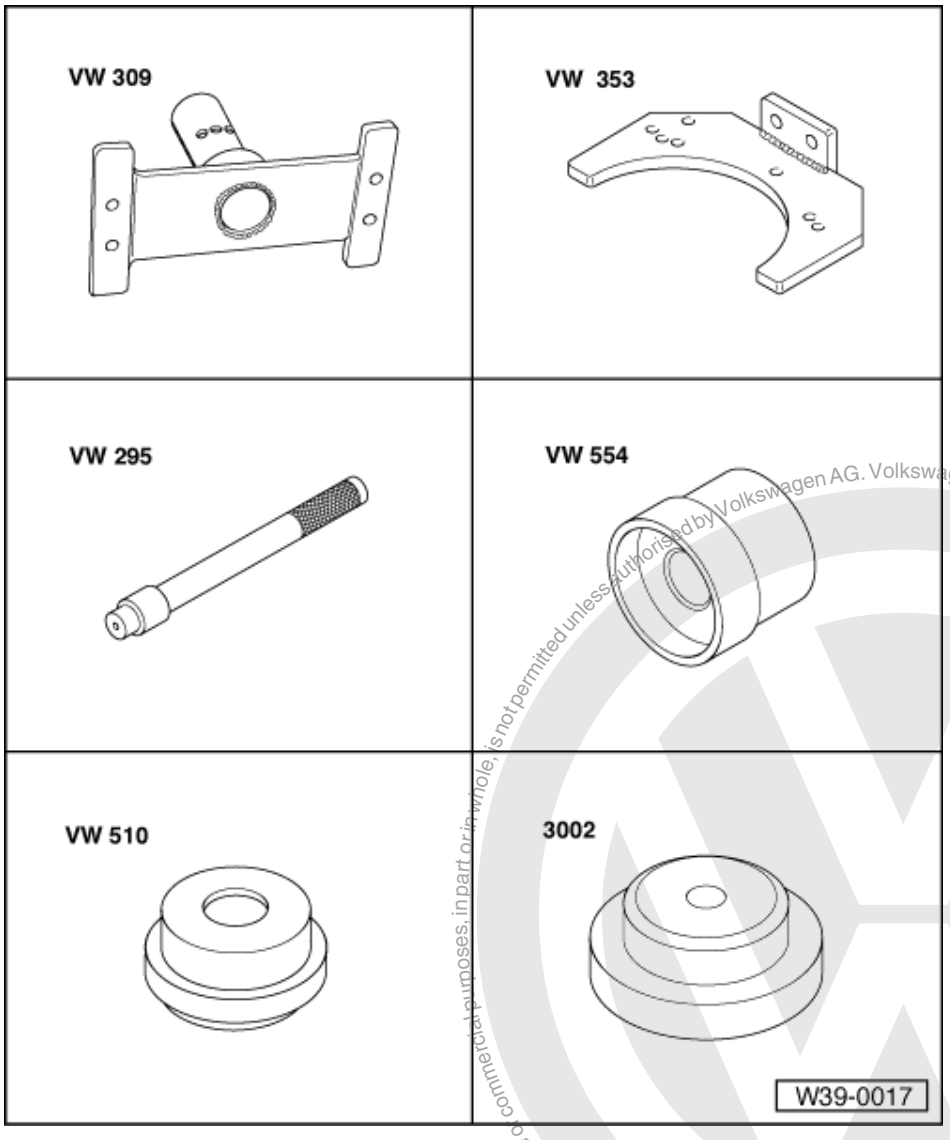

Special tools and workshop equipment required

- VW 309 Holding plate
- VW 353 Gearbox support
- VW 295 Drift
- VW 554 Press piece
- VW 510 Press disk
- 3002 Press piece

Protected by copyright. Copying for private or commercial purposes, in part or in whole, is not permitted unless authorised by Volkswagen AG. Volkswagen AG does not guarantee or accept any liability with respect to the correctness of information in this document. Copyright by Volkswagen AG.
satelettronica

Protected by copyright. Copying for private or commercial purposes, in part or in whole, is not permitted unless authorised by Volkswagen AG. Volkswagen AG does not guarantee or accept any liability with respect to the correctness of information in this document. Copyright by Volkswagen AG.

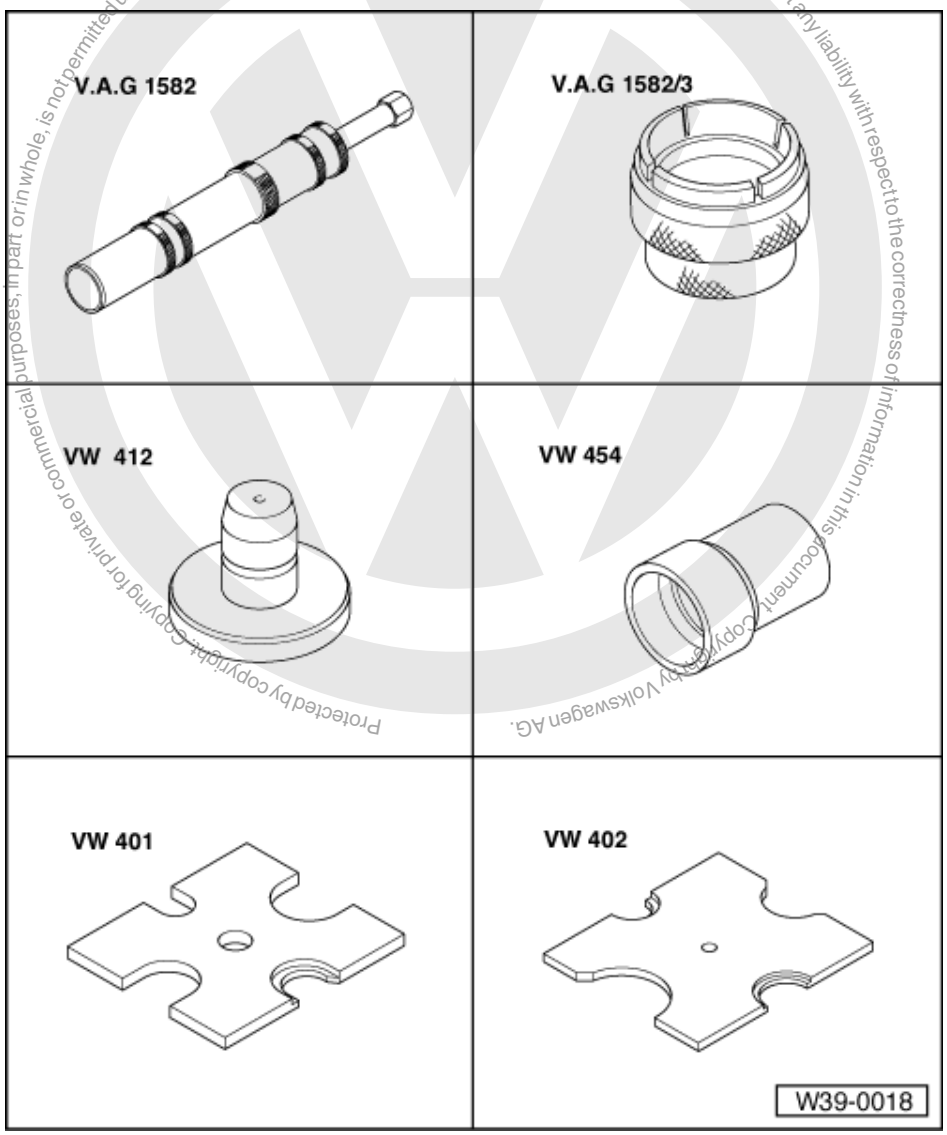

Special tools and workshop equipment required

- V.A.G 1582 Puller
- V.A.G 1582/3 Grip
- VW 412 Press tool
- VW 454 Press piece
- VW 401 Thrust plate
- VW 402 Thrust plate

Special tools and workshop equipment required

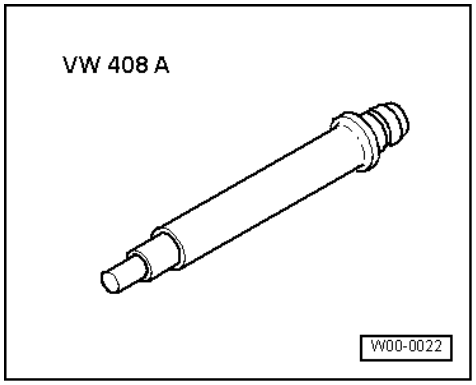

satelettronica

- VW 408 a Press tool

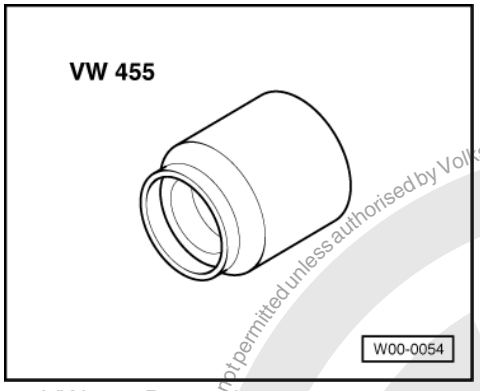

- VW 455 Press sleeve

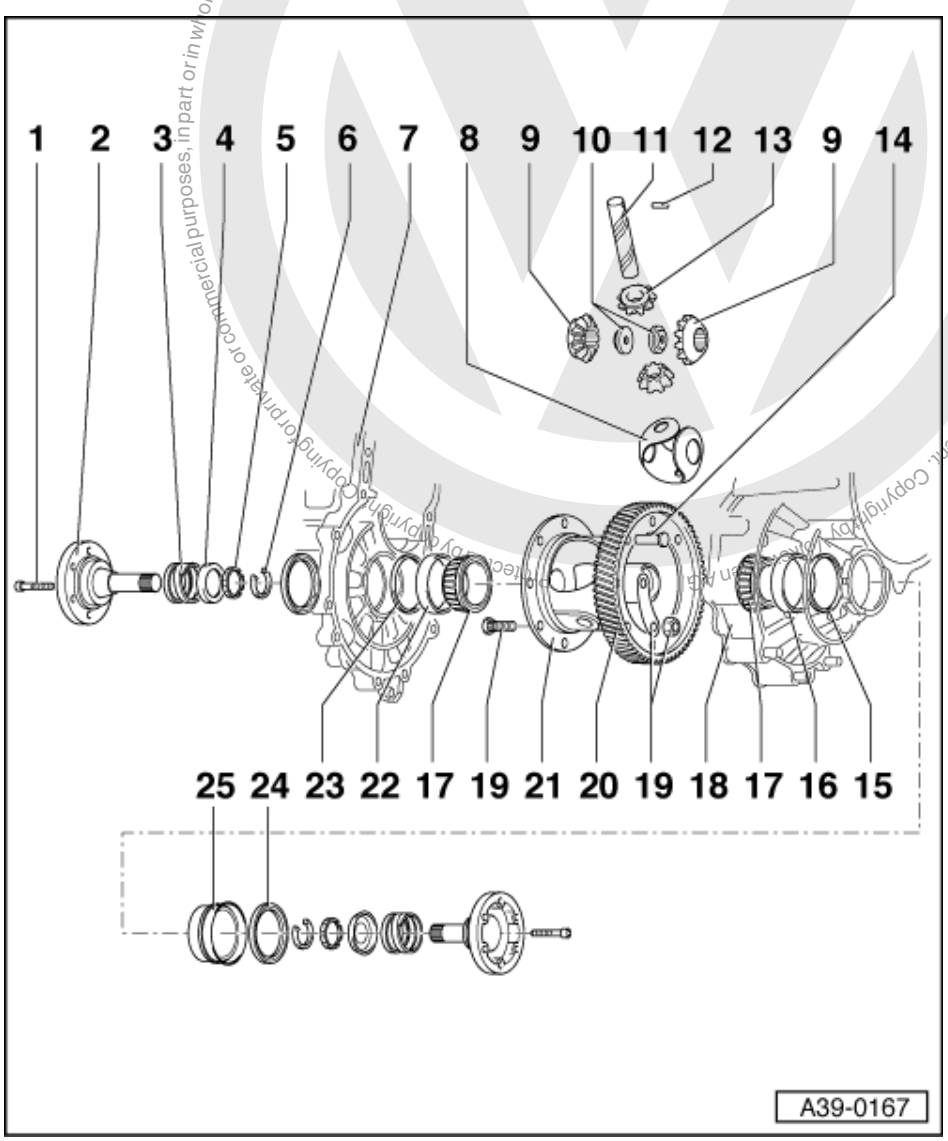

Notes:

- Heat taper roller bearing inner race to 100 °C before installing.
- Always renew both taper roller bearings together as a set.

Copyright by Volkswagen AG. Volkswagen AG does not guarantee or accept any liability with respect to the correctness of information in this document. Copyright by Volkswagen AG. Copying for private or commercial purposes, in part or in whole, is not permitted unless authorised by Volkswagen AG.
satelettronica

Protected by copyright. Copying for private or commercial purposes, in part or in whole, is not permitted unless authorised by Volkswagen AG. Volkswagen AG does not guarantee or accept any liability with respect to the correctness of information in this document. Copyright by Volkswagen AG.

- If taper roller bearings, differential housing, gearbox housing and clutch housing are renewed adjust differential => Page 162 .

1 Hexagon socket head bolt, 25 Nm
  - Bolt into threaded piece (item 10)

2 Flange shaft
  - Removing and installing => Page 147

3 Spring for flanged shaft
  - Installed behind flange shafts

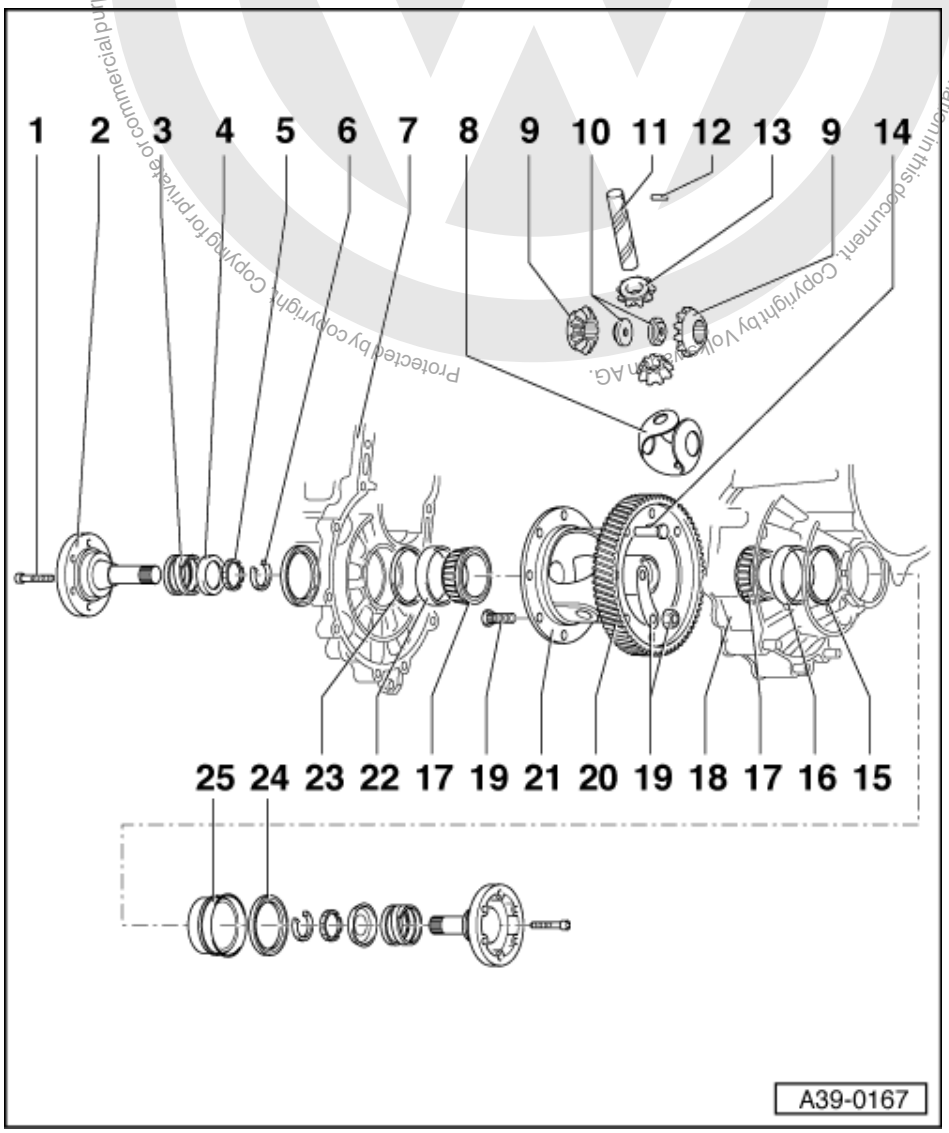

4 Thrust washer
  - Installation position: Shoulder towards spring, tongue to tapered ring

5 Tapered ring
  - With grooves to secure thrust washer
  - Installation position: Taper towards differential housing

6 Securing clip
  - Ensures taper ring, thrust washer and spring are held in position when flange shaft is removed

7 Gearbox housing

8 One-piece thrust washer
  - Coat with gearbox oil when installing

satelettronica

9 Sun wheel
- Installing => Fig. 13

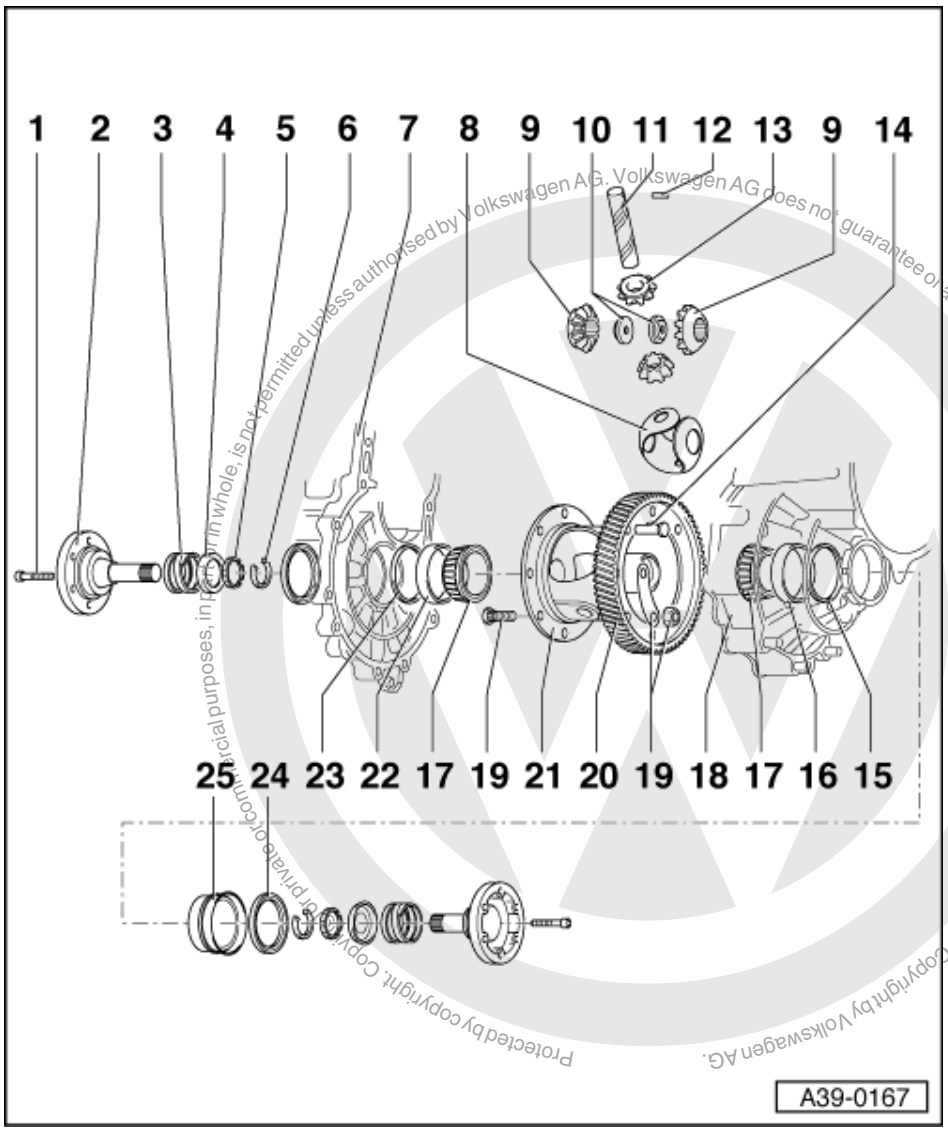

10 Threaded piece
- Installing => Fig. 13

11 Planet pinion axis shaft
- Knock out with drift
- Installing => Fig. 13

12 Spring pin
- For securing planet pinion axis shaft
- Removing and installing => Fig. 8

13 Planet pinion
- Installing => Fig. 13

14 Rivet
- As produced
- Drilling out => Fig. 7

15 Shim S2
- Always 1 mm thick

16 Taper roller bearing outer race
- Driving out => Fig. 1 , first remove sleeve (item 25)

Protected by copyright. Copyright by Volkswagen AG.
Volkswagen AG does not guarantee or accept any liability with respect to the correctness of information in this document. Copyright by Volkswagen AG.
Copy or private or commercial purposes, in part or in whole, is not permitted unless authorised by Volkswagen AG.
satelettronica

- Driving in => Fig. 2

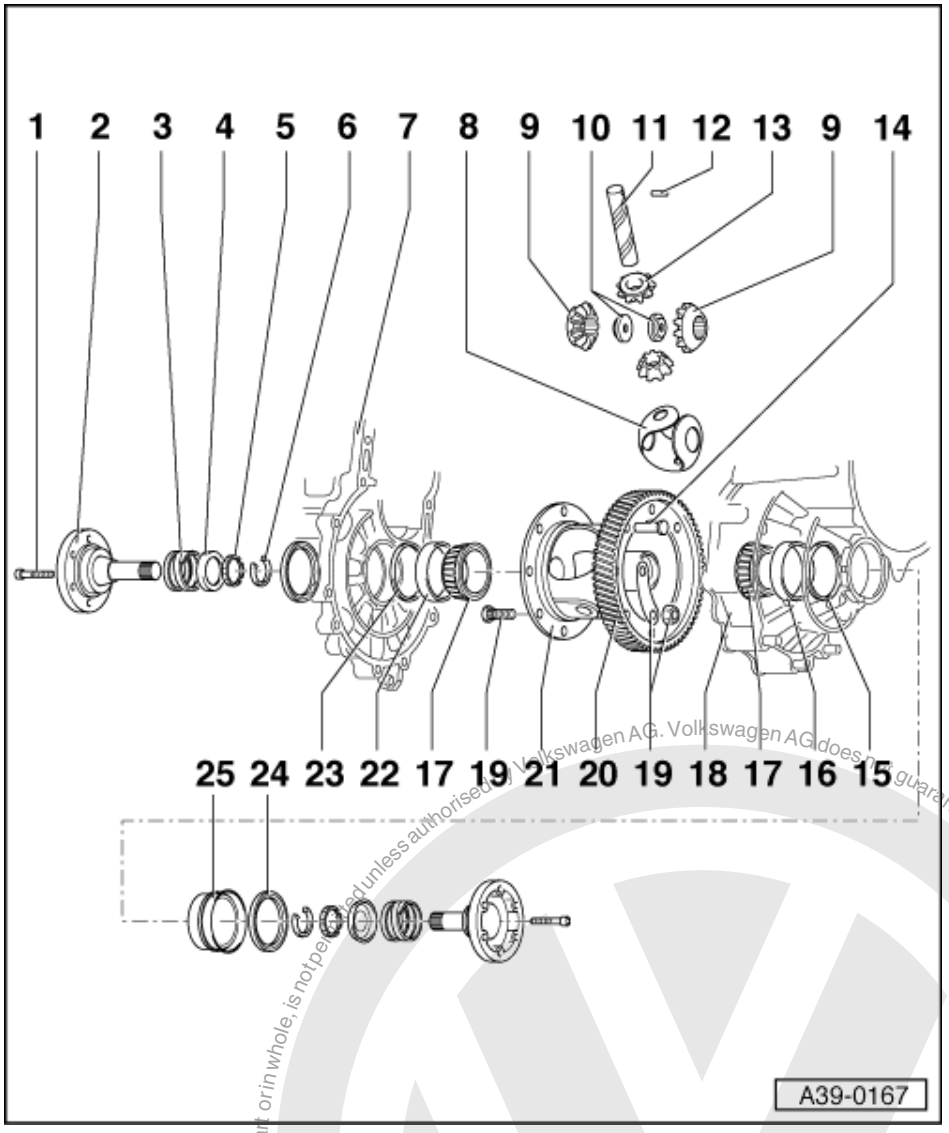

17 Taper roller bearing inner race
- Pulling off => Fig. 3
- Pressing on => Fig. 4

18 Clutch housing

19 Repair kit
- Only for Service department
- Installing => Fig. 12
- Hexagon nut, 65 Nm

20 Final drive gear wheel
- Rivetted in production
- Is paired with output shaft, only renew as a set
- Pressing off => Fig. 9
- Installation position => Fig. 10
- Heat to 100 °C before installing
- Fit to differential housing => Fig. 11
- Bolted => Fig. 12

21 Differential cage

Protected by copyright. Copying for private or commercial purposes, in part or in whole, is not permitted unless authorised by Volkswagen AG. Volkswagen AG does not guarantee or accept any liability with respect to the correctness of information in this document. Copyright by Volkswagen AG.
satelettronica

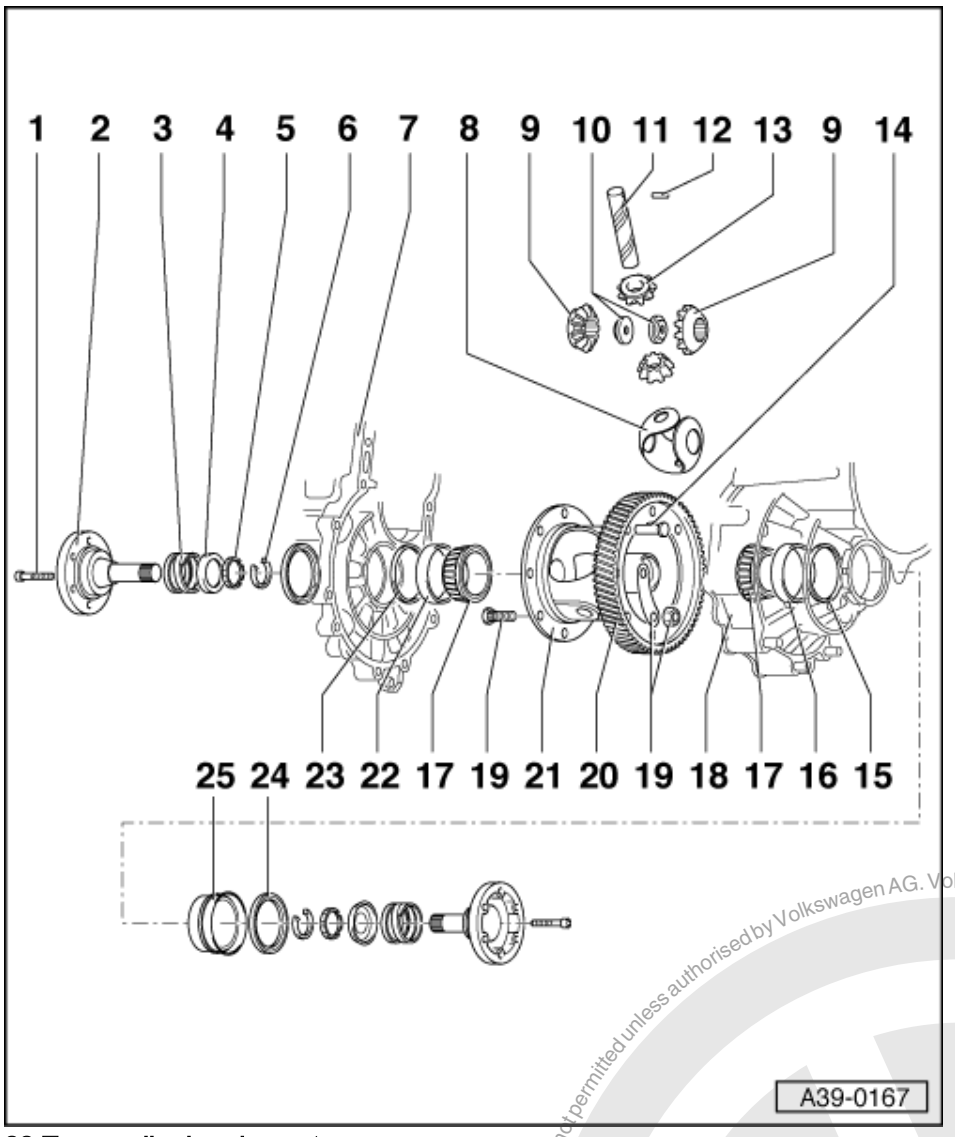

22 Taper roller bearing outer race
- Driving out => Fig. 5
- Driving in => Fig. 6

23 Shim S1
- Determining thickness => Page 164

24 Oil seal
- Renewing => Page 147

25 Sleeve
- To accept oil seal
- Removing and installing => Page 114

Protected by copyright. Copying for private or commercial purposes, in part or in whole, is not permitted unless authorised by Volkswagen AG. Volkswagen AG does not guarantee or accept any liability with respect to the correctness of information in this document. Copyright by Volkswagen AG.
satelettronica

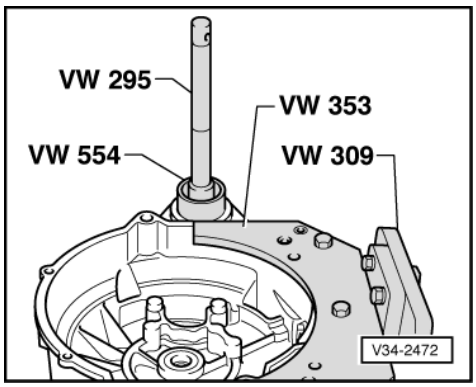

-> Fig.1 Knocking taper roller bearing outer race out of clutch housing

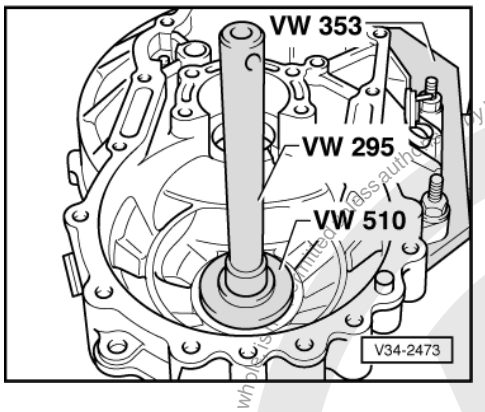

-> Fig.2 Driving taper roller bearing outer race into clutch housing

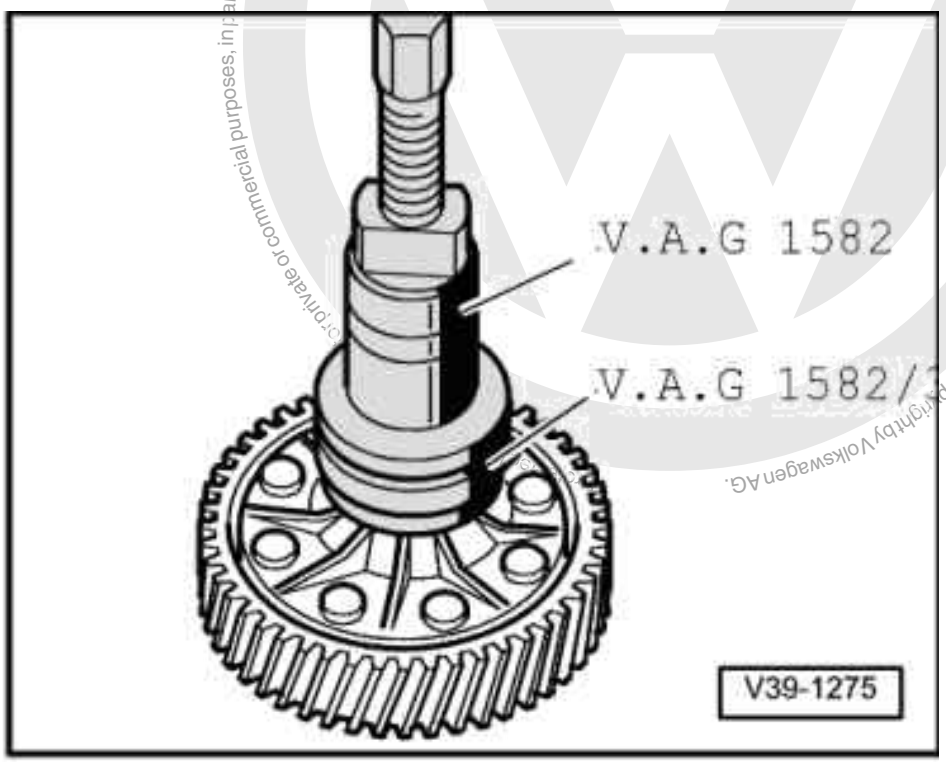

satelettronica

-> Fig.3 Pulling off taper roller bearing inner race

- Before fitting the extractor, position press piece 3002 on differential housing.

Note:

Both both taper roller bearing inner races are pulled off the differential housing in the same way.

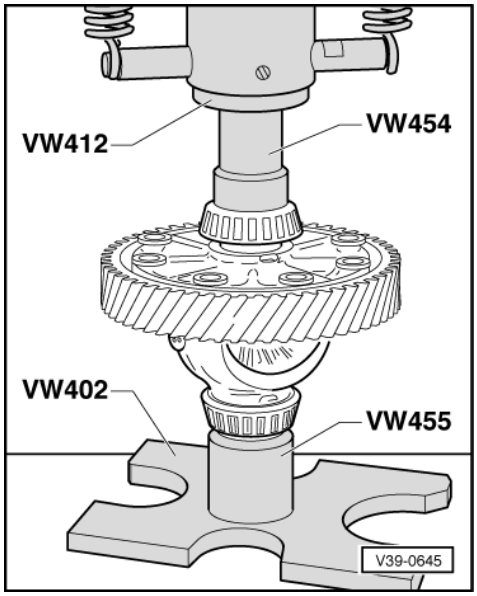

-> Fig.4 Pressing on taper roller bearing inner race

Note:

The taper roller bearing inner races for gearbox housing side and clutch housing side are pressed on with the same press tools.

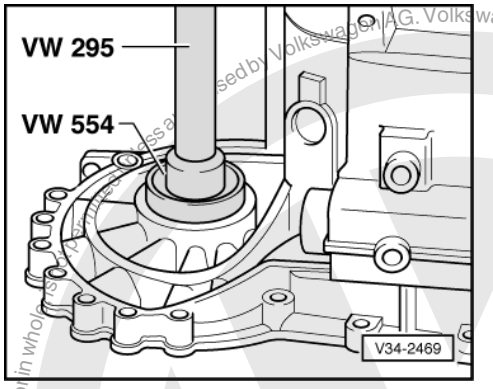

-> Fig.5 Driving taper roller bearing outer race out of gearbox housing

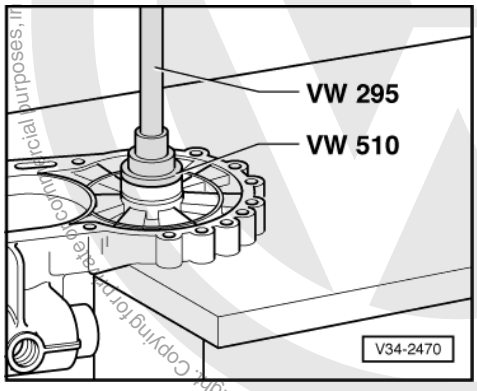

Protected by copyright. Copying for private or commercial purposes, in part or in whole, is not permitted unless authorised by Volkswagen AG. Volkswagen AG does not guarantee or accept any liability with respect to the correctness of information in this document. Copyright by Volkswagen AG.

satelettronica

-> Fig.6 Driving taper roller bearing outer race into gearbox housing

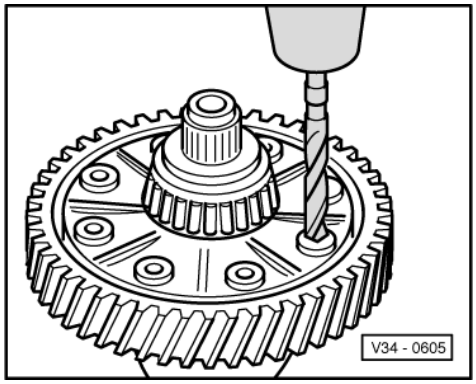

-> Fig.7 Drilling out rivet heads

- Drill out rivet heads with 12 mm drill from countersunk side and drive rivet out with drift.

Note:

Clean differential before and after drilling, protect taper roller bearing from drillings.

Protected by copyright. Copying for private or commercial purposes, in part or in whole, is not permitted unless authorised by Volkswagen AG. Volkswagen AG does not guarantee or accept any liability with respect to the correctness of information in this document. Copyright by Volkswagen AG.

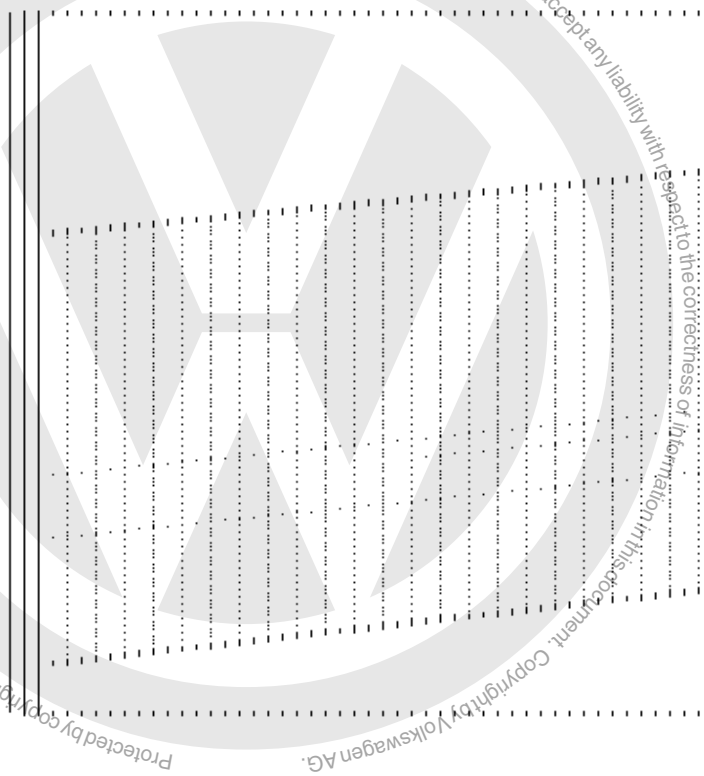

-> Fig.8 Removing and installing differential axis shaft tensioning sleeve

Removing

- Cover taper roller bearing inner race and speedometer drive gear to avoid possible damage and ingress of metal particles.
- Knock-out spring pin with chisel, inserting chisel into circumferential groove.

satelettronica

Installing
- Knock fully into the differential cage.

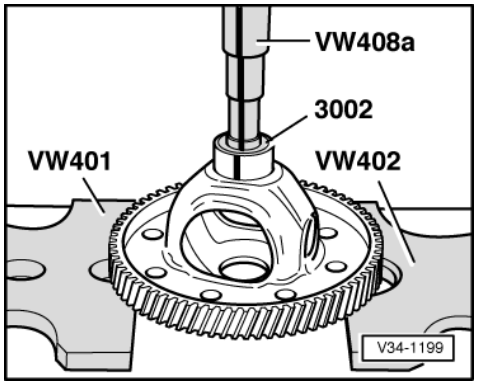

-> Fig.9 Pressing off final drive gear

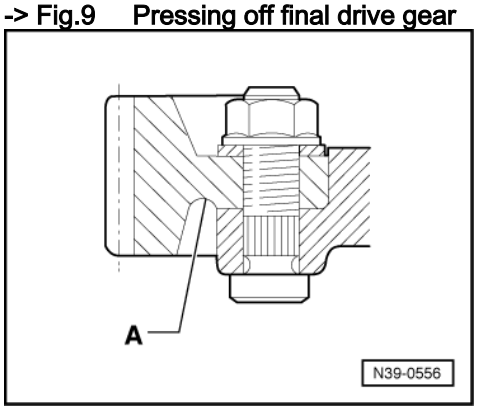

-> Fig.10 Installation position of final drive gear wheel
The circular groove -A- faces towards bolt-on side of differential.

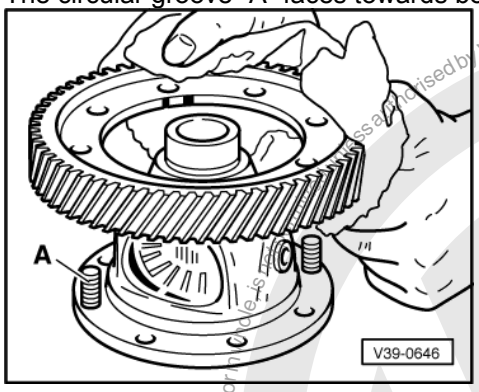

-> Fig.11 Heating final drive gear wheel to approx. 100 °C and installing
- Use bolts -A- from repair kit to guide final drive gear into position during installation.

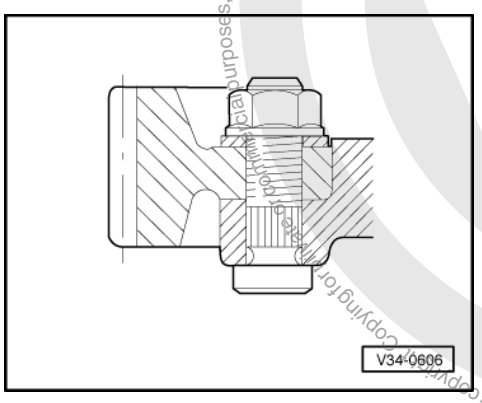

Protected by copyright. Copying for private or commercial purposes, in part or in whole, is not permitted unless authorised by Volkswagen AG. Volkswagen AG does not guarantee or accept any liability with respect to the correctness of information in this document. Copyright by Volkswagen AG.
satelettronica

-> Fig.12 Bolting final drive gear and differential housing together

Use special bolts with plates and nuts according to parts microfiche.

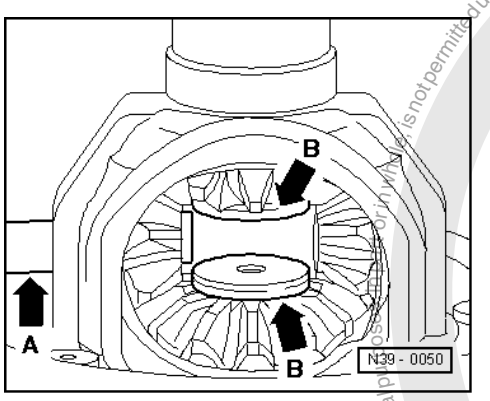

-> Fig.13 Installing sun wheels and planet pinions

- Lubricate one piece thrust washer with gearbox oil and install.
- Install both sun wheels and secure (e.g. with flange shaft).
- Insert planet wheels (180°apart) and pivot into position.
- Push planet wheel axis shaft (arrow -A-) in until first planet wheel.
- Position threaded pieces (arrow -B-) in sun wheels
  Installation position: step towards sun wheel
- Drive planet wheel axis shaft into final position and secure with spring pin.

3 - Adjustment overview

3.1 - Adjustment overview

Note:

If repairs have been carried out to the gearbox it is only necessary to adjust the, output shaft or differential if components have been renewed which have a direct effect on the adjustment of the gearbox. Refer to the following table to avoid unnecessary adjustment:

		to be adjusted:	
		Output shaft => Page 143	Differential (S1and S2) => Page 162
Part replaced:	Gearbox housing		x
	Clutch housing	x	x
	Taper roller bearings for differential		x
	Output shaft (drive pinion)	x	
	Differential housing		x
	Taper roller bearings for output shaft	x	

Protected by copyright. Copying for private or commercial purposes, in part or in whole, is not permitted unless authorised by Volkswagen AG. Volkswagen AG does not guarantee or accept any liability with respect to the correctness of information in this document. Copyright by Volkswagen AG.
satelettronica

4 - Adjusting differential

4.1 - Adjusting differential

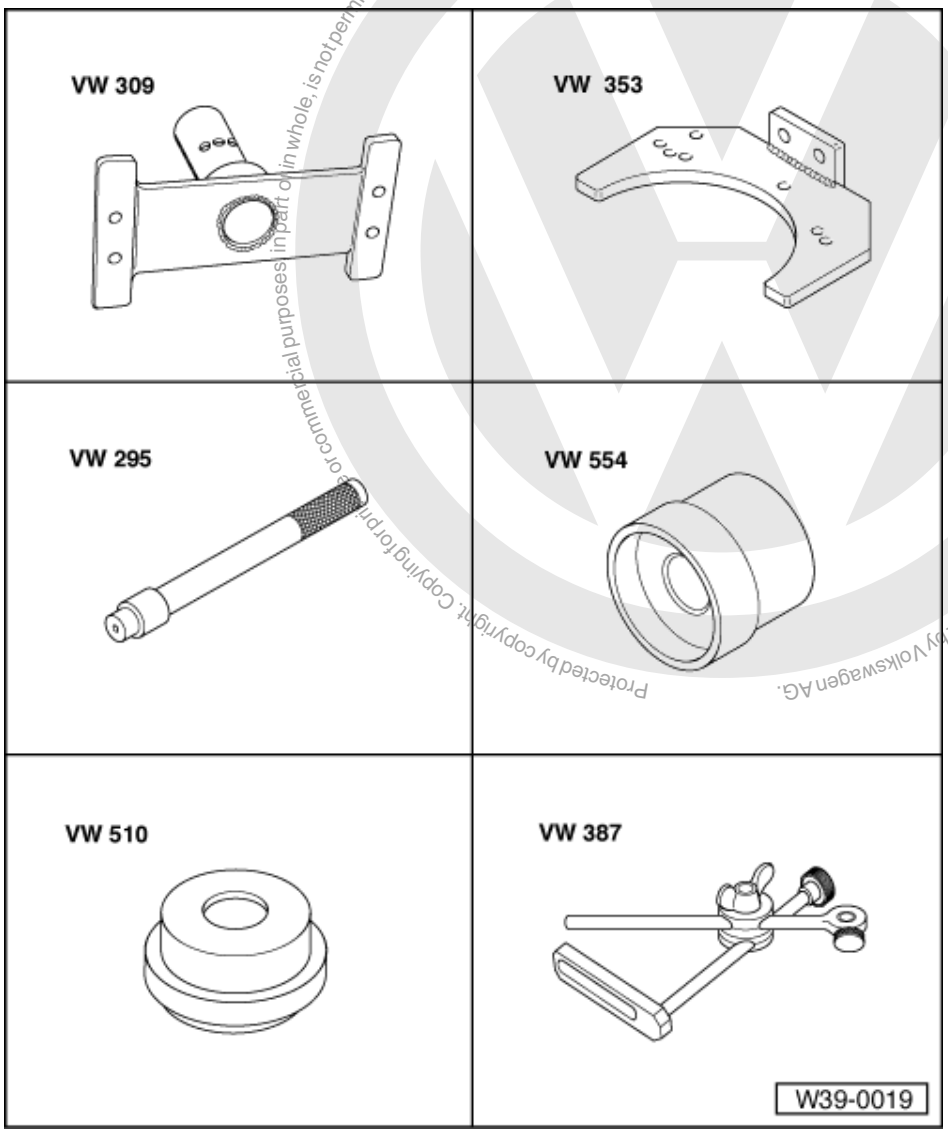

Protected by copyright. Copying for private or commercial purposes, in part or in whole, is not permitted unless authorised by Volkswagen AG. Volkswagen AG does not guarantee or accept any liability with respect to the correctness of information in this document. Copyright by Volkswagen AG.

satelettronica

Special tools and workshop equipment required

- VW 309 Holding plate
- VW 353 Gearbox support
- VW 295 Drift
- VW 554 Press piece
- VW 510 Press disk
- VW 387 Universal dial gauge bracket

Special tools and workshop equipment required

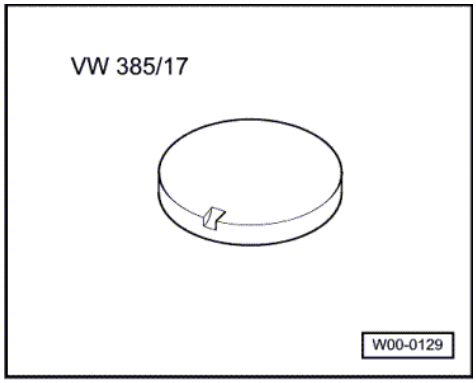

- VW 385/17 Measuring plate

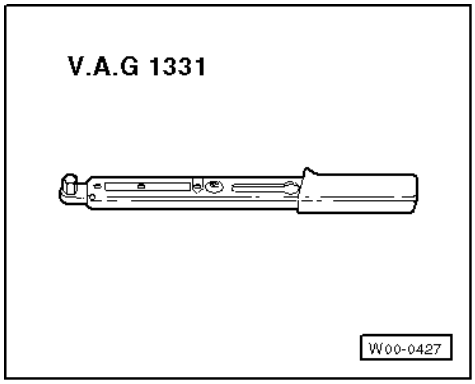

- V.A.G 1331 Torque wrench
- Dial gauge

The differential must be adjusted, when

- Gearbox housing
- Clutch housing
- Differential housing

or the

- Differential taper roller bearing

have been renewed.

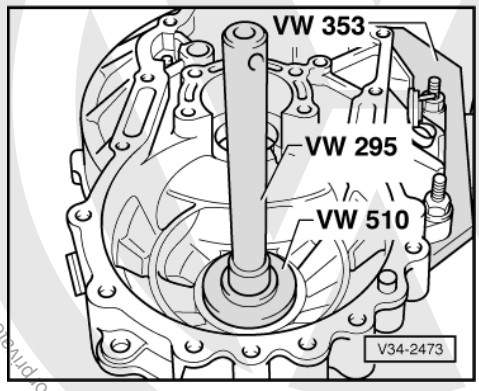

Adjustment overview => Page 161 .

- -> Drive in taper roller bearing outer race with shim S2 (always 1 mm thick) into clutch housing.

satelettronica

Note:

Taper roller bearing inner and outer races are paired. Do not interchange!

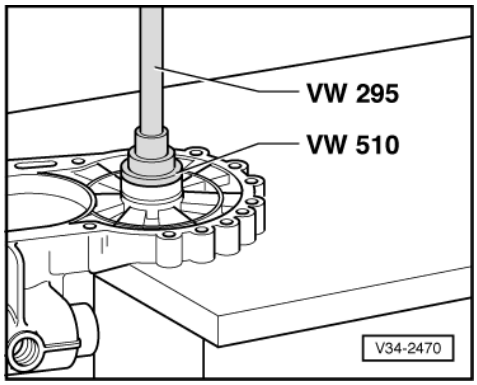

- -> Press taper roller bearing outer race without shim into gearbox housing.
- Fit differential into clutch housing
- Fit gearbox housing and tighten 5 bolts to 25 Nm.

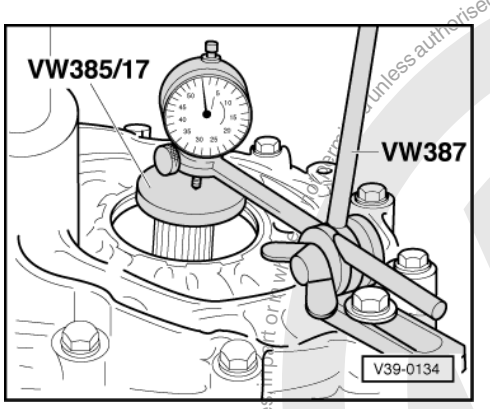

- -> Mount dial gauge and "0" with 1 mm preload.
- Move differential up and down, read off and note play indicated on D.T.I. (Example: 0.90 mm)

Determining shim S1 thickness

The specified bearing preload is obtained by adding a constant figure (0.40 mm) to the reading obtained for S1 (example: 0.90 mm).

Example:

Reading	0.90 mm

+ Preload (constant figure)	0.40 mm
Thickness of shim S1=	1.30 mm

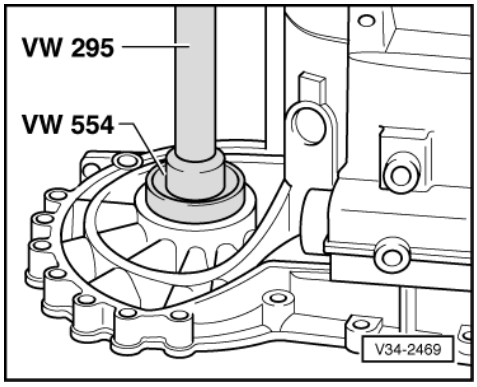

satelettronica

- -> Remove gearbox housing and pull taper roller bearing outer race out from gearbox housing.
- Insert shim(s) S1as per size calculated, thickest shim first.

The following shims are available:

Size (mm)	Part No.
0.65	02K 409 210
0.70	02K 409 210 A
0.75	02K 409 210 B
0.80	02K 409 210 C
0.85	02K 409 210 D
0.90	02K 409 210 E
0.95	02K 409 210 F
1.00	02K 409 210 G
1.05	02K 409 210 H
1.10	02K 409 210 J
1.15	02K 409 210 K
1.20	02K 409 210 L
1.25	02K 409 210 M

Varying tolerances make it possible by measuring the shims to obtain the exact shim thickness required.

If the size of shim required is larger than that listed in the table, insert two shims totalling the correct figure.

- Drive in outer race again, fit gearbox housing with gasket and tighten.

Protected by copyright. Copying for private or commercial purposes, in part or in whole, is not permitted unless authorised by Volkswagen AG. Volkswagen AG does not guarantee or accept any liability with respect to the correctness of information in this document. Copyright by Volkswagen AG.

satelettronica